REVISIONS		
ISS	ZONE	DESCRIPTION\PER REQUEST\DATE

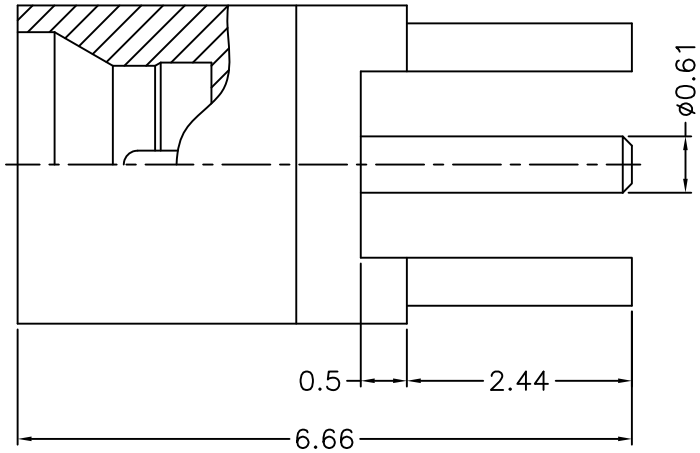

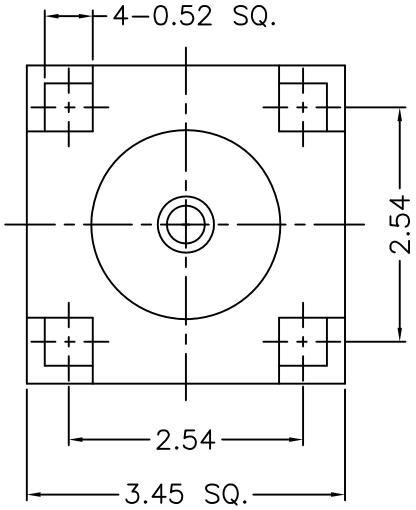

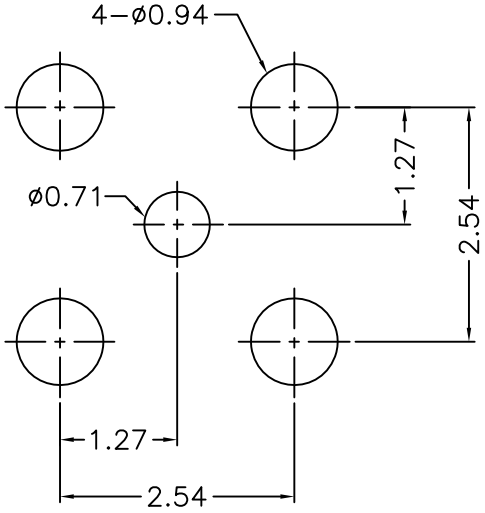

PCB MOUNTING HOLE
（印刷電路板架設孔）

NOTES: FINISH (PLATING THICKNESS IN MICRO–INCHES)
1. BERYLLIUM COPPER
2. GOLD PL. 3 MIN. THICK OVER NICKEL PL. 50 MIN. THICK OVER COPPER PL. 50 MIN. THICK
3. PTFE
4. GOLD PL. 30 MIN. THICK OVER NICKEL PL. 50 MIN. THICK OVER COPPER PL. 50 MIN. THICK

RoHS COMPLIANT

NO.	DESCRIPTION	MATERIAL	FINISH	Q'TY	DRAWING NO.
3	CONTACT PIN	NOTE 1	NOTE 4		
2	INSULATOR	NOTE 3	NATURAL		
1	BODY	NOTE 1	NOTE 2		

DIMENSIONS ARE IN MILLIMETERS

UNLESS OTHERWISE SPECIFIED TOLERANCES
0.5–6 = ±0.2
6–30 = ±0.4
30–120 = ±0.6
120–315 = ±1
315–1000 = ±1.6
1000–2000 = ±2.4

SCALE 12/1 | ISSUE A

PART NO.

APPROVED DATE 09–24–'20

CHECKED DATE 09–24–'20

DRAWN DATE 09–24–'20

G.L.I.

TITLE MINI–SMP FULL DETENT PCB MOUNT JACK (M)

DRAWING NO. SMPM–1251S6–50

FILE NO. R:\D\DWG\SMPM\1251S6\50