REVISIONS		
ISS	ZONE	DESCRIPTION\PER REQUEST\DATE

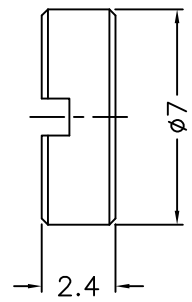

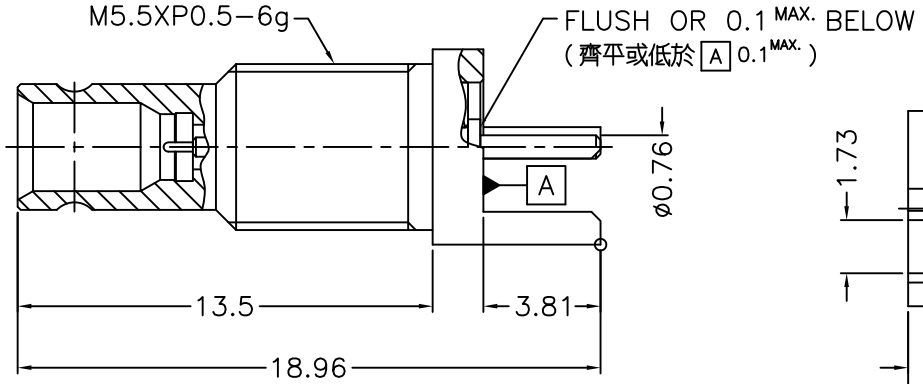

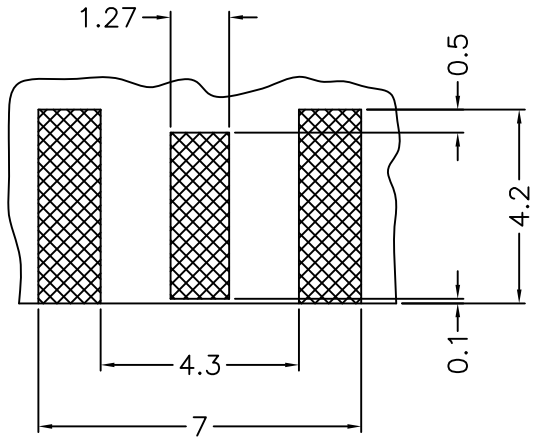

PCB LAYOUT

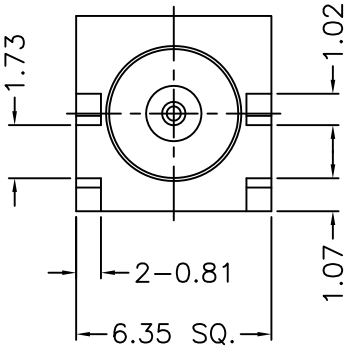

NOTES: FINISH (PLATING THICKNESS IN MICRO–INCHES)
1. BRASS
2. NICKEL PL. 100 MIN. THICK OVER COPPER PL. 50 MIN. THICK
3. GOLD PL. 3 MIN. THICK OVER NICKEL PL. 50 MIN. THICK OVER COPPER PL. 50 MIN. THICK
4. PTFE

RoHS COMPLIANT

NO.	DESCRIPTION	MATERIAL	FINISH	Q'TY	DRAWING NO.
4	NUT	NOTE 1	NOTE 2		
3	CONTACT PIN	NOTE 1	NOTE 3		
2	INSULATOR	NOTE 4	NATURAL		
1	BODY	NOTE 1	NOTE 3		

DIMENSIONS ARE IN MILLIMETERS

UNLESS OTHERWISE SPECIFIED TOLERANCES
0.5–6 = ±0.2
6–30 = ±0.4
30–120 = ±0.6
120–315 = ±1
315–1000 = ±1.6
1000–2000 = ±2.4

SCALE 4/1 | ISSUE 1

PART NO.

APPROVED | DATE 06–24–'20

CHECKED | DATE 06–24–'20

DRAWN BRIAN | DATE 06–24–'20

G.L.I.

TITLE
MINI SMP END LAUNCH MOUNT JACK

DRAWING NO.
SMPM–1251S5–50

FILE NO. R:\D\DWG\SMPM\1251S5\50