REVISIONS		
ISS	ZONE	DESCRIPTION\PER REQUEST\DATE

IMPEDANCE		75ohm	
FREQUENCY RANGE		DC–12.0GHz	
RETURN LOSS (VSWR)	DC–<6GHz	–20dB	<1.22
	6–12GHz	–15dB	<1.43

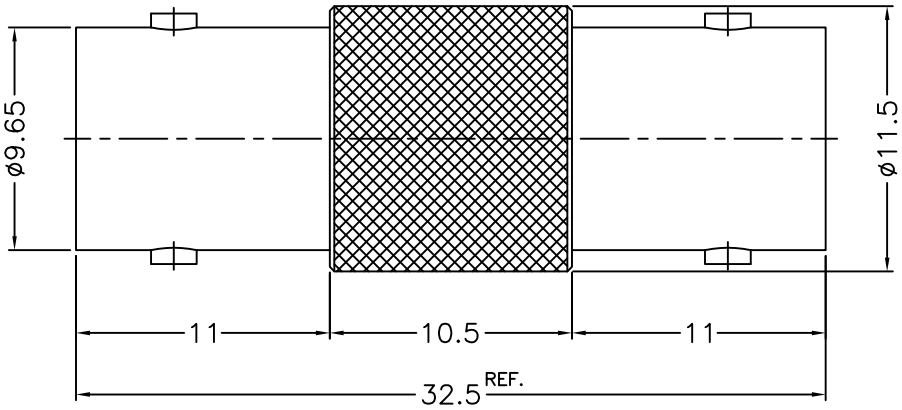

NOTES: FINISH (PLATING THICKNESS IN MICRO–INCHES)
1. BRASS
2. NICKEL PL. 100 MIN. THICK OVER COPPER PL. 50 MIN. THICK
3. BERYLLIUM COPPER
4. GOLD PL. 3 MIN. THICK OVER NICKEL PL. 50 MIN. THICK OVER COPPER PL. 50 MIN. THICK
5. TEFLON

RoHS COMPLIANT

NO.	DESCRIPTION	MATERIAL	FINISH	Q'TY	DRAWING NO.
5	LOCK RING	NOTE 1	NOTE 2	1	900–6121B4–4
4	CONTACT PIN	NOTE 3	NOTE 4	1	900–7071A6–4
3	CONTACT PIN	NOTE 3	NOTE 4	1	900–7071A6–3
2	INSULATOR	NOTE 5	NATURAL	2	900–7071A6–2 –75T
1	BODY	NOTE 1	NOTE 2	1	900–7071A5–1

DIMENSIONS ARE IN MILLIMETERS
UNLESS OTHERWISE SPECIFIED TOLERANCES
0.5–6 = ±0.2
6–30 = ±0.4
30–120 = ±0.6
120–315 = ±1
315–1000 = ±1.6
1000–2000 = ±2.4

SCALE 3/1 | ISSUE 1

PART NO.

APPROVED | DATE 08–06–'18

CHECKED | DATE 08–06–'18

DRAWN BRIAN | DATE 08–06–'18

G.L.I.

TITLE
BNC JACK TO JACK ADAPTOR

DRAWING NO.
900–7071A6–75

ITEM NO. R:\D\G\DWG\900\7071A6\75