REVISIONS		
ISS	ZONE	DESCRIPTION\PER REQUEST\DATE

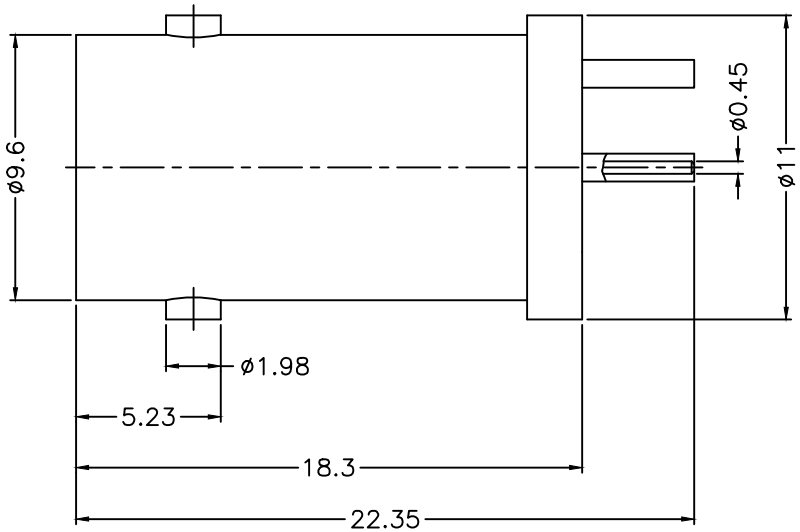

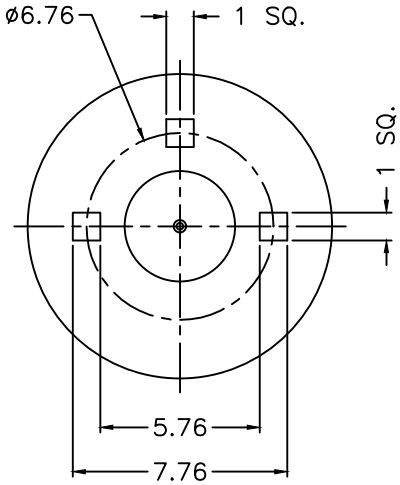

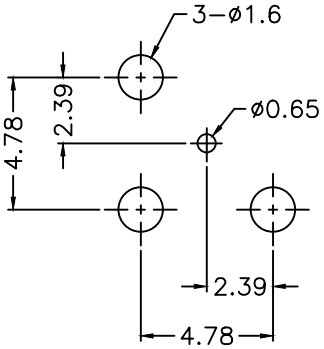

PCB MOUNTING HOLE
(印刷電路板架設孔)

NOTES: FINISH (PLATING THICKNESS IN MICRO–INCHES)
1. BRASS
2. NICKEL PL. 100 MIN. THICK OVER COPPER PL. 50 MIN. THICK
3. PHOSPHOR BRONZE
4. GOLD PL. 3 MIN. THICK OVER NICKEL PL. 50 MIN. THICK OVER COPPER PL. 50 MIN. THICK
5. TEFLON

RoHS COMPLIANT

NO.	DESCRIPTION	MATERIAL	FINISH	Q'TY	DRAWING NO.
4	LOCK RING	IRON	NOTE 2	1	900–6000–4
3	CONTACT PIN	NOTE 3	NOTE 4	1	900–6251S4–3
2	INSULATOR	NOTE 5	NATURAL	1	900–6251S4–2 –75T
1	BODY	NOTE 1	NOTE 2	1	900–6251S4–1

DIMENSIONS ARE IN MILLIMETERS

UNLESS OTHERWISE SPECIFIED TOLERANCES
0.5–6 = ±0.2
6–30 = ±0.4
30–120 = ±0.6
120–315 = ±1
315–1000 = ±1.6
1000–2000 = ±2.4

SCALE	4/1	ISSUE	A

PART NO.

APPROVED	DATE	09–04–'14
CHECKED	DATE	09–04–'14
DRAWN	DATE	09–04–'14

G.L.I.

TITLE
BNC P.C. MOUNT RECEPT. JACK

DRAWING NO.
900–6251S4–75T

FILE NO. R:\D\G\DWG\900\6251S4\75T