| REVISIONS | | |
|---|---|---|
| ISS | ZONE | DESCRIPTION\PER REQUEST\DATE |
| | | |

| | | | |
|---|---|---|---|
| IMPEDANCE | | 75ohm | |
| FREQUENCY RANGE | | DC–12.0GHz | |
| RETURN LOSS (VSWR) | DC–<6GHz | –20dB | <1.22 |
| | 6–12GHz | –15dB | <1.43 |

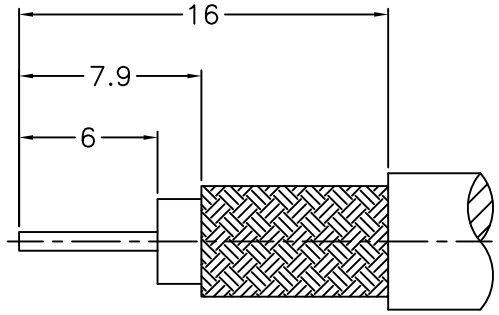


RECOMMENDED
CABLE STRIPPING DIM'S
（建議剝線尺寸）

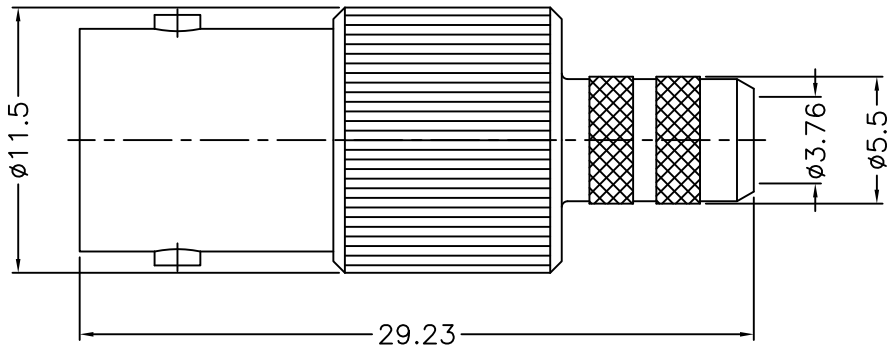


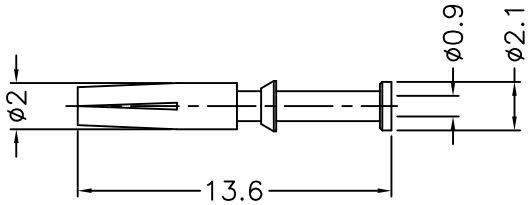


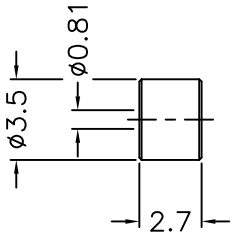


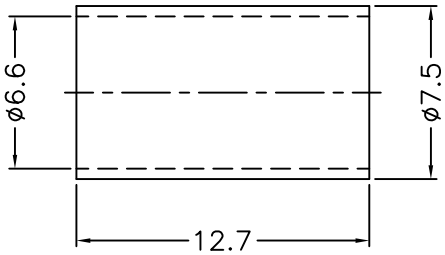


NOTES: FINISH (PLATING THICKNESS IN MICRO–INCHES)
1. BRASS
2. NICKEL PL. 100 MIN. THICK OVER COPPER PL. 50 MIN. THICK
3. PHOSPHOR BRONZE
4. GOLD PL. 3 MIN. THICK OVER NICKEL PL. 50 MIN. THICK OVER COPPER PL. 50 MIN. THICK
5. TEFLON

1. CRIMPED FERRULE
HEX CRIMP SIZE .255"
2. CRIMPED CONTACT PIN
HEX CRIMP SIZE .042"

RoHS COMPLIANT

| NO. | DESCRIPTION | MATERIAL | FINISH | Q'TY | DRAWING NO. |
|---|---|---|---|---|---|
| 6 | FERRULE | NOTE 1 | NOTE 2 | 1 | FR–66–75–127 |
| 5 | INSULATOR | NOTE 5 | NATURAL | 1 | 900–6121B6–5T –0.81 |
| 4 | CONTACT PIN | NOTE 3 | NOTE 4 | 1 | 900–6121B6–4 –0.9 |
| 3 | LOCK RING | NOTE 1 | NOTE 2 | 1 | 900–6121B4–4 |
| 2 | INSULATOR | NOTE 5 | NATURAL | 1 | 900–6121B6–2 –75T |
| 1 | BODY | NOTE 1 | NOTE 2 | 1 | 900–6121B6–1 –11 |

DIMENSIONS ARE IN MILLIMETERS

UNLESS OTHERWISE SPECIFIED TOLERANCES
0.5–6 = ±0.2
6–30 = ±0.4
30–120 = ±0.6
120–315 = ±1
315–1000 = ±1.6
1000–2000 = ±2.4

| SCALE | 3/1 | ISSUE | 1 |
|---|---|---|---|

| | | |
|---|---|---|
| PART NO. | | |
| APPROVED | | DATE 07–30–'18 |
| CHECKED | | DATE 07–30–'18 |
| DRAWN | BRIAN | DATE 07–30–'18 |

G.L.I.

TITLE
BNC CRIMP JACK
(FOR BELDEN 1505A/4505R CABLE)

DRAWING NO.
900–6121B6–11–75

ITEM NO. R:\D\G\DWG\900\6121B6\11\75