REVISIONS		
ISS	ZONE	DESCRIPTION\PER REQUEST\DATE

IMPEDANCE		75ohm	
FREQUENCY RANGE		DC–12.0GHz	
RETURN LOSS (VSWR)	DC–<6GHz	–20dB	<1.22
	6–12GHz	–15dB	<1.43

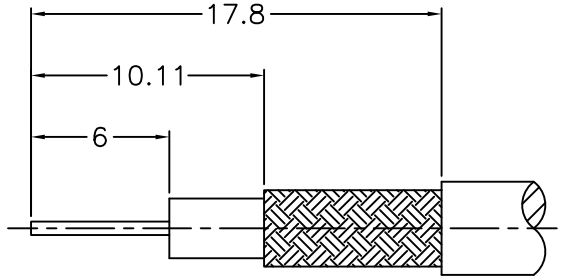

RECOMMENDED
CABLE STRIPPING DIM'S
（建議剝線尺寸）

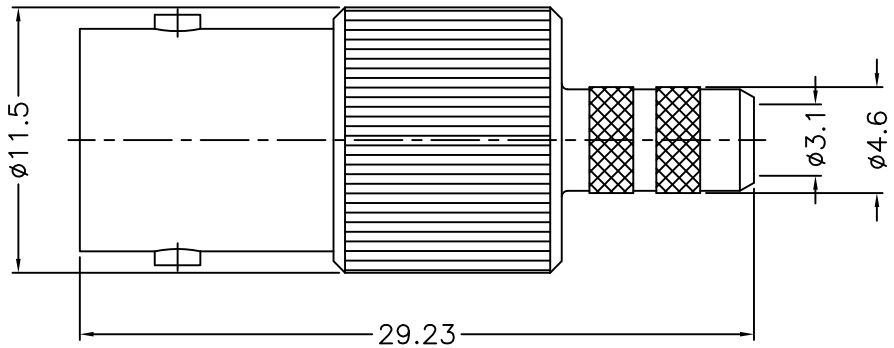

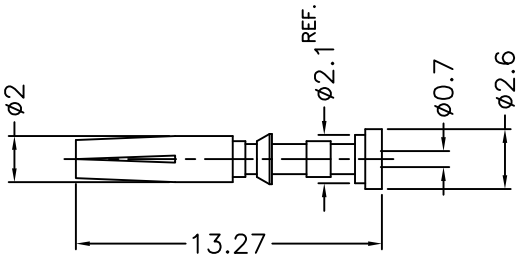

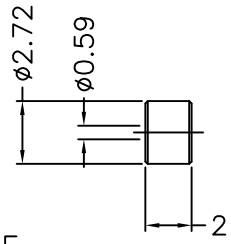

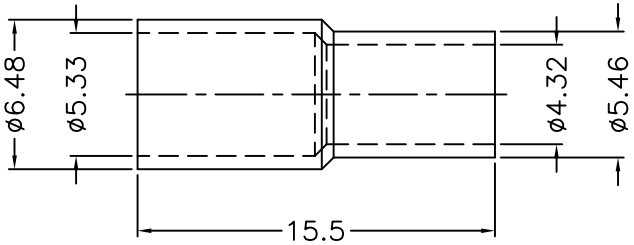

NOTES: FINISH (PLATING THICKNESS IN MICRO–INCHES)
1. BRASS
2. NICKEL PL. 100 MIN. THICK OVER COPPER PL. 50 MIN. THICK
3. PHOSPHOR BRONZE
4. GOLD PL. 3 MIN. THICK OVER NICKEL PL. 50 MIN. THICK OVER COPPER PL. 50 MIN. THICK
5. TEFLON

1. CRIMPED FERRULE
   HEX CRIMP SIZE .213"
2. CONTACT PIN TO SOLDER

RoHS COMPLIANT

NO.	DESCRIPTION	MATERIAL	FINISH	Q'TY	DRAWING NO.
6	FERRULE	NOTE 1	NOTE 2	1	FR–533–648–432–546–155
5	INSULATOR	NOTE 5	NATURAL	1	900–6121B5–5T
4	CONTACT PIN	NOTE 3	NOTE 4	1	900–6121B5–4–0.7
3	LOCK RING	NOTE 1	NOTE 2	1	900–6121B4–4
2	INSULATOR	NOTE 5	NATURAL	1	900–6121B5–2–75T
1	BODY	NOTE 1	NOTE 2	1	900–6121B5–1–A1

DIMENSIONS ARE IN MILLIMETERS

UNLESS OTHERWISE SPECIFIED TOLERANCES
0.5–6 = ±0.2
6–30 = ±0.4
30–120 = ±0.6
120–315 = ±1
315–1000 = ±1.6
1000–2000 = ±2.4

SCALE 3/1 | ISSUE 1

PART NO.

APPROVED | DATE 07–20–'18

CHECKED | DATE 07–20–'18

DRAWN BRIAN | DATE 07–20–'18

G.L.I.

TITLE
BNC CRIMP JACK
(FOR BELDEN 4855R CABLE)

DRAWING NO. 900–6121B5–A1–75

ITEM NO. R:\D\G\DWG\900\6121B5\A1\75