REVISIONS		
ISS	ZONE	DESCRIPTION\PER REQUEST\DATE

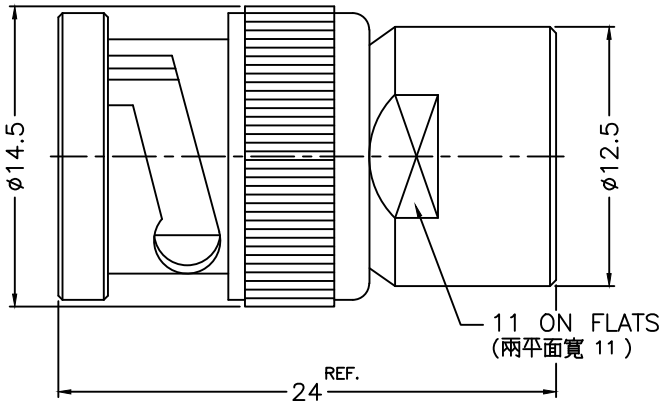

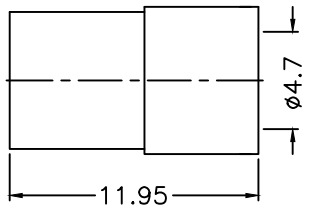

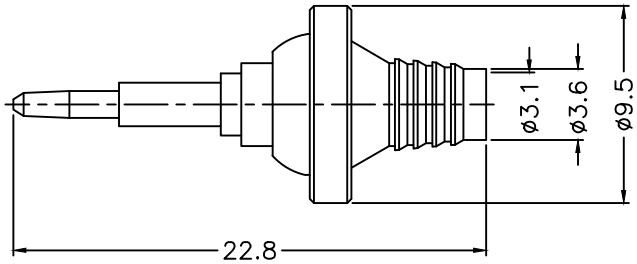

NOTES: FINISH (PLATING THICKNESS IN MICRO-INCHES)
1. BRASS
2. NICKEL PL. 100 MIN. THICK OVER COPPER PL. 50 MIN. THICK
3. GOLD PL. 3 MIN. THICK OVER NICKEL PL. 50 MIN. THICK OVER COPPER PL. 50 MIN. THICK
4. SILVER PL. 100 MIN. THICK OVER COPPER PL. 50 MIN. THICK
5. DELRIN
6. TEFLON

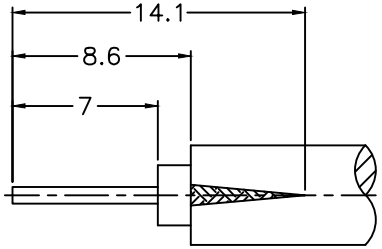

RECOMMENDED
CABLE STRIPPING DIM'S
(建議剝線尺寸)

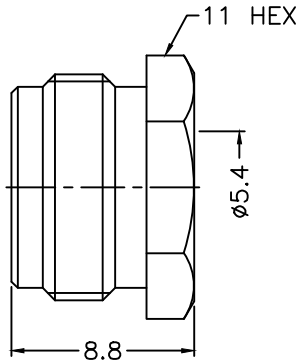

NO.	DESCRIPTION	MATERIAL	FINISH	Q'TY	DRAWING NO.
11	HEX NUT	NOTE 1	NOTE 2	1	HN-11-71628-88-54
10	BARREL	NOTE 1	NOTE 4	1	900-1141G1-10-06
9	INSULATOR	NOTE 6	NATURAL	1	900-1141G1-9T
8	CONTACT PIN	NOTE 1	NOTE 3	1	900-1141G1-8-1.2
7	INSULATOR	NOTE 5	NATURAL	1	900-1141G1-7-50D
6	WASHER	NOTE 1	NOTE 2	1	WS-90-128-08
5	SPRING	SK5	NOTE 2	1	900-1000-6
4	RETAINER RING	NOTE 1	NOTE 2	1	900-1000-5
3	GASKET	RUBBER	RED	1	GS-80-115-15
2	BODY	NOTE 1	NOTE 2	1	900-5074A1-2
1	SHELL	NOTE 1	NOTE 2	1	900-1000-1

DIMENSIONS ARE IN MILLIMETERS

UNLESS OTHERWISE SPECIFIED TOLERANCES
0.5-6 = ±0.2
6-30 = ±0.4
30-120 = ±0.6
120-315 = ±1
315-1000 = ±1.6
1000-2000 = ±2.4

SCALE 3/1 | ISSUE A

PART NO.

APPROVED DATE 02-06-'14

CHECKED DATE 02-06-'14

DRAWN DATE 02-06-'14

G.L.I.

TITLE
BNC CLAMP PLUG
(FOR RG-58, 58A, 58C, 141 CABLE)

DRAWING NO.
900-1141G1-06-50D

FILE NO. R:\D\G\DWG\900\1141G1\06\50D