REVISIONS		
ISS	ZONE	DESCRIPTION\PER REQUEST\DATE

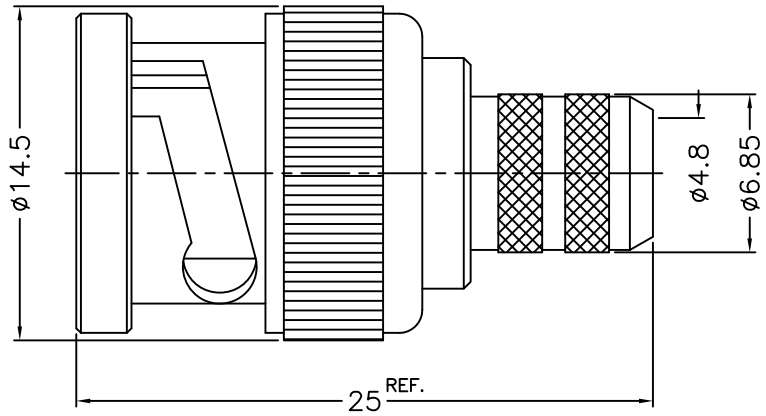

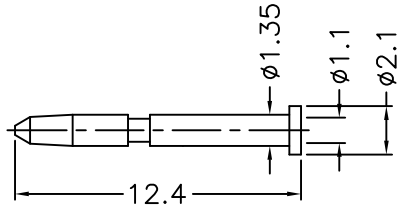

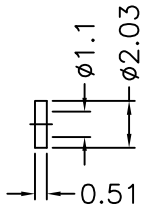

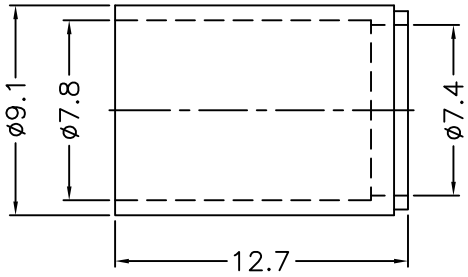

1. CRIMPED FERRULE
   HEX CRIMP SIZE .319"
2. CRIMPED CONTACT PIN
   HEX CRIMP SIZE .041" OR .042"

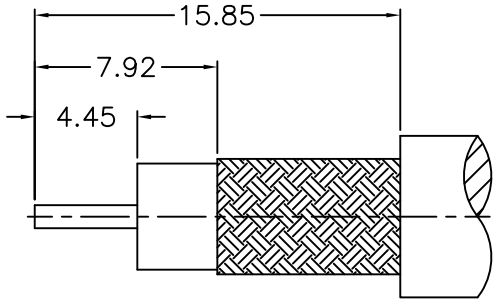

RECOMMENDED
CABLE STRIPPING DIM'S
(建議剝線尺寸)

NO.	DESCRIPTION	MATERIAL	FINISH	Q'TY	DRAWING NO.
11	FERRULE	NOTE 1	NOTE 2	1	FR-78-91-74 -86-127
10	INSULATOR	NOTE 5	NATURAL	1	900-1121A21 -10T-1.1
9	CONTACT PIN	NOTE 1	NOTE 4	1	900-1121A11-9 -1.1
8	RING	NOTE 1	NOTE 2	1	900-1121A11-8
7	WASHER	NOTE 1	NOTE 2	1	WS-90-128-08
6	SPRING	SK5	NOTE 2	1	900-1000-6
5	GASKET	SILICONE	RED	1	GS-80-115-15 -S
4	OUTER CONTACT	NOTE 3	NOTE 2	1	900-1121A11-4
3	INSULATOR	NOTE 5	NATURAL	1	900-1121A11-3 -75T
2	BODY	NOTE 1	NOTE 2	1	900-1121A21-2 -21
1	SHELL	NOTE 1	NOTE 2	1	900-1121A11-1

NOTES: FINISH (PLATING THICKNESS IN MICRO-INCHES)
1. BRASS
2. NICKEL PL. 100 MIN. THICK OVER COPPER PL. 50 MIN. THICK
3. BERYLLIUM COPPER
4. GOLD PL. 3 MIN. THICK OVER NICKEL PL. 50 MIN. THICK OVER COPPER PL. 50 MIN. THICK
5. TEFLON

RoHS COMPLIANT

DIMENSIONS ARE IN MILLIMETERS

UNLESS OTHERWISE SPECIFIED TOLERANCES
0.5-6 = ±0.2
6-30 = ±0.4
30-120 = ±0.6
120-315 = ±1
315-1000 = ±1.6
1000-2000 = ±2.4

SCALE 3/1 | ISSUE 1

PART NO.

APPROVED | DATE 07-12-'18

CHECKED | DATE 07-12-'18

DRAWN ANGELA | DATE 07-12-'18

G.L.I.

TITLE
BNC CRIMP PLUG
(FOR BELDEN 1694A/4694R CABLE)

DRAWING NO. 900-1121A21-21-75

FILE NO. R:\D\G\DWG\900\1121A21\21\75