REVISIONS		
ISS	ZONE	DESCRIPTION\PER REQUEST\DATE
B	D-2	DESIGN WAS CHANGED\RD-DM020510001\05-10-'13
C	E-2	PROCESS WAS CHANGED\RD-DM050520001\05-20-'16

NOTE: 1. IMPEDANCE: 75 OHM
2. FREQUENCY RANGE: DC – 3 GHz
3. VSWR: 1.1 Max.
4. DIELECTRIC WITHSTANDING VOLTAGE: 1500 VRMS MIN.

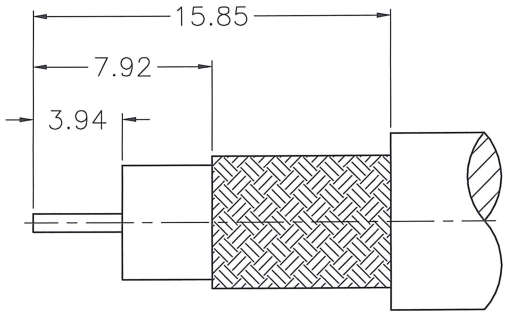

RECOMMENDED
CABLE STRIPPING DIM'S
(建議剝線尺寸)

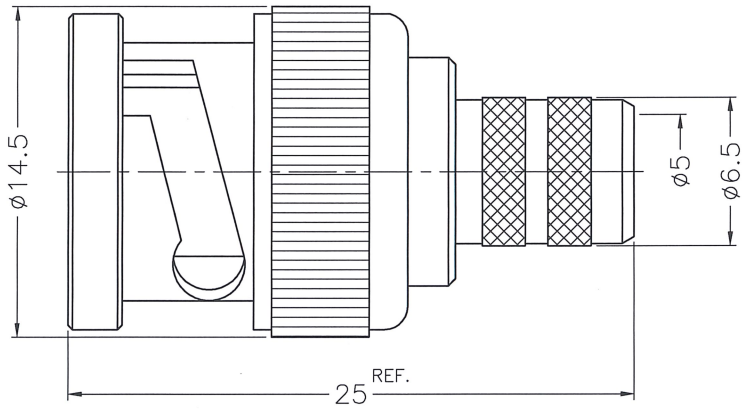

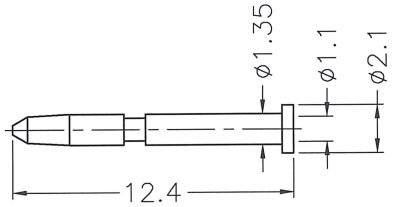

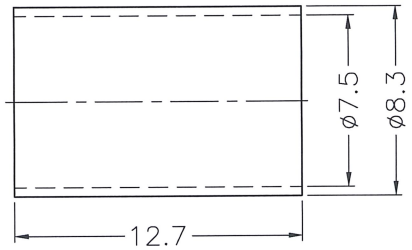

出圖
2023.8.02
設計部

1. CRIMPED FERRULE
HEX CRIMP SIZE .278"
2. CRIMPED CONTACT PIN
HEX CRIMP SIZE .041" OR .042"

NO.	DESCRIPTION	MATERIAL	FINISH	Q'TY	DRAWING NO.
10	FERRULE	NOTE 1	NOTE 2	1	FR-75-83-127
9	CONTACT PIN	NOTE 1	NOTE 4	1	900-1121A11-9-1.1
8	RING	NOTE 1	NOTE 2	1	900-1121A11-8
7	WASHER	NOTE 1	NOTE 2	1	WS-90-128-08
6	SPRING	SK5	NOTE 2	1	900-1000-6
5	GASKET	SILICONE	RED	1	GS-80-115-15-S
4	OUTER CONTACT	NOTE 3	NOTE 2	1	900-1121A11-4
3	INSULATOR	NOTE 5	NATURAL	1	900-1121A11-3-75T
2	BODY	NOTE 1	NOTE 2	1	900-1121A11-2-21
1	SHELL	NOTE 1	NOTE 2	1	900-1121A11-1

NOTES: FINISH (PLATING THICKNESS IN MICRO-INCHES)
1. BRASS
2. NICKEL PL. 100 MIN. THICK OVER COPPER PL. 50 MIN. THICK
3. BERYLLIUM COPPER
4. GOLD PL. 3 MIN. THICK OVER NICKEL PL. 50 MIN. THICK OVER COPPER PL. 50 MIN. THICK
5. TEFLON

Amphenol Connex

RoHS COMPLIANT

DIMENSIONS ARE IN MILLIMETERS
UNLESS OTHERWISE SPECIFIED TOLERANCES
0.5–6 = ±0.2
6–30 = ±0.4
30–120 = ±0.6
120–315 = ±1
315–1000 = ±1.6
1000–2000 = ±2.4

SCALE 3/1 ISSUE C

PART NO. 112957-11

APPROVED Golden DATE 05-20-'16
CHECKED Golden DATE 05-20-'16
DRAWN Angela DATE 05-20-'16

G.L.I.

TITLE BNC CRIMP PLUG (RG6 PLENUM/BELDEN 1694A)

DRAWING NO. 900-1121A11-21-75

FILE NO. R:\D\G\DWG\900\1121A11\21\75