REVISIONS		
ISS	ZONE	DESCRIPTION\PER REQUEST\DATE

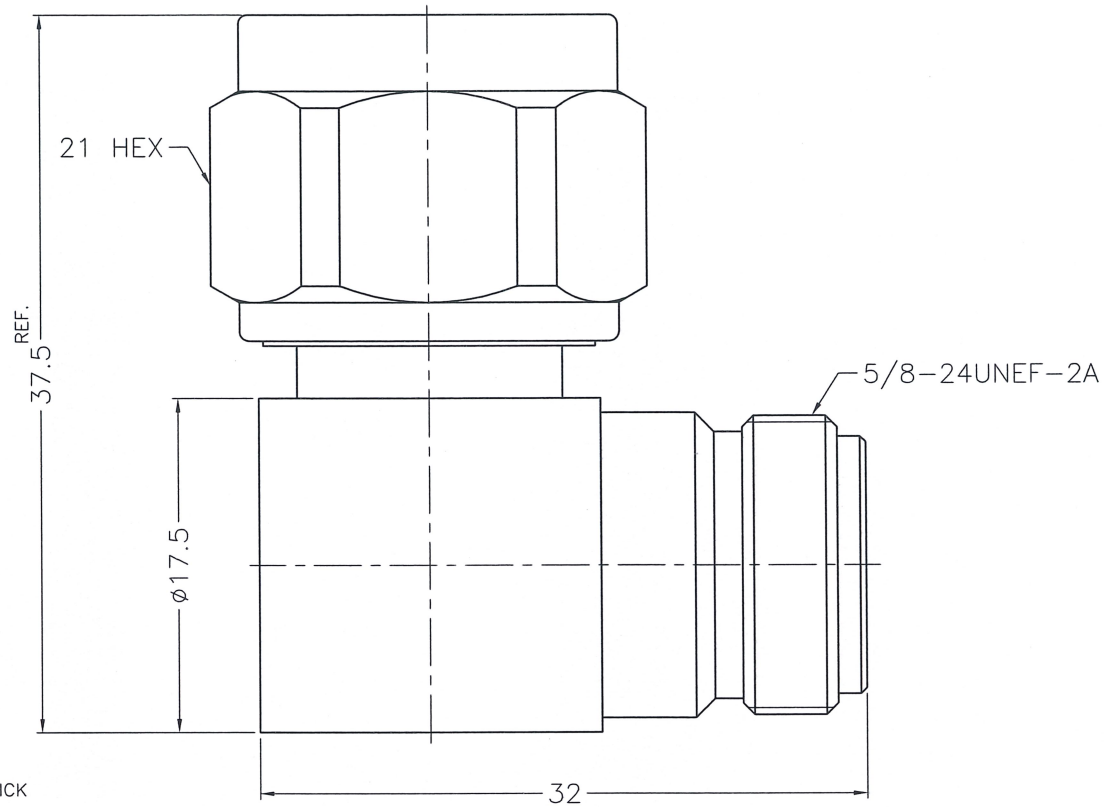

NOTES: FINISH (PLATING THICKNESS IN MICRO-INCHES)
1. BRASS
2. NICKEL PL. 100 MIN. THICK OVER COPPER PL. 50 MIN. THICK
3. PHOSPHOR BRONZE
4. GOLD PL. 3 MIN. THICK OVER NICKEL PL. 50 MIN. THICK OVER COPPER PL. 50 MIN. THICK
5. TEFLON

RoHS COMPLIANT

NO.	DESCRIPTION	MATERIAL	FINISH	Q'TY	DRAWING NO.
9	BUSHING	NOTE 1	NOTE 2	1	2063-9010-40
8	INSULATOR	NOTE 5	NATURAL	1	2061-9010-20
7	BODY WITH HOSUING	NOTE 1	NOTE 2	1	5824-5072H3-7
6	RETAINER RING	NOTE 3	NATURAL	1	2010-0000-80
5	INSULATOR	NOTE 5	NATURAL	1	2063-9010-20
4	GASKET	SILICONE	RED	1	GS-80-156-15
3	INNER SHELL	NOTE 1	NOTE 2	1	5824-5072H3-3
2	SHELL	NOTE 1	NOTE 2	1	2010-0050-50
1	CONTACT PIN	NOTE 3	NOTE 4	1	2063-9010-10

DIMENSIONS ARE IN MILLIMETERS

UNLESS OTHERWISE SPECIFIED TOLERANCES
0.5-6 = ±0.2
6-30 = ±0.4
30-120 = ±0.6
120-315 = ±1
315-1000 = ±1.6
1000-2000 = ±2.4

SCALE 2.5/1 | ISSUE 2

PART NO.

APPROVED Golden DATE 11-25-'16

CHECKED Golden DATE 11-25-'16

DRAWN ANGELA DATE 11-25-'16

G.L.I.

TITLE
N R/A PLUG TO JACK ADAPTOR

DRAWING NO.
5824-5072H3-50

FILE NO. R:\D\G\DWG\5824\5072H3\50