REVISIONS		
ISS	ZONE	DESCRIPTION\PER REQUEST\DATE

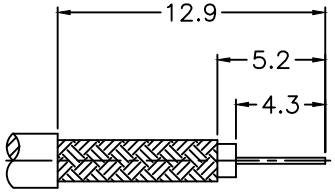

RECOMMENDED
CABLE STRIPPING DIM'S
（建議剝線尺寸）

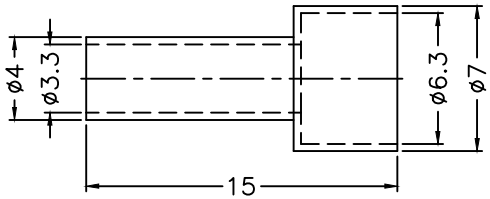

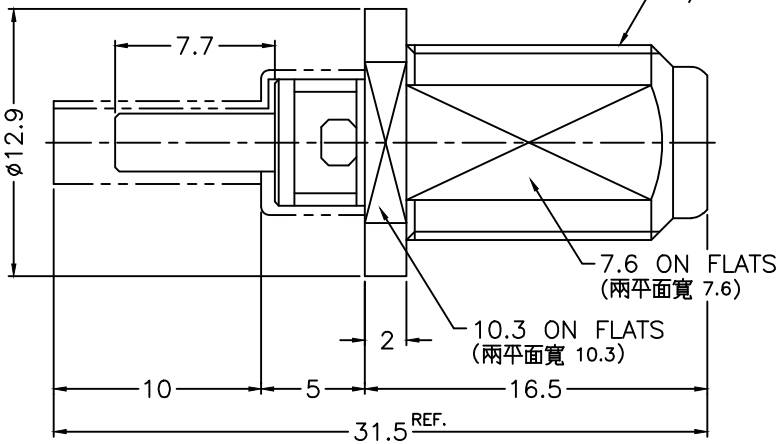

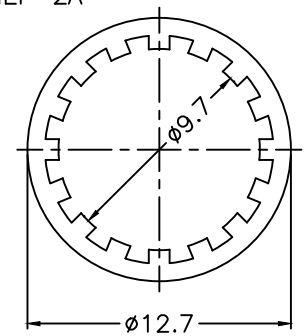

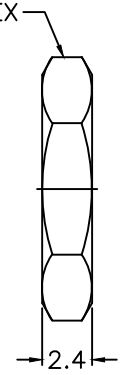

NOTES: FINISH (PLATING THICKNESS IN MICRO-INCHES)
1. ZINC DIECAST
2. BRASS
3. NICKEL PL. 100 MIN. THICK OVER COPPER PL. 50 MIN. THICK
4. BRIGHT TIN PL. 200 MIN. THICK OVER NICKEL PL. 50 MIN. THICK OVER COPPER PL. 50 MIN. THICK

1. CRIMPED FERRULE
HEX CRIMP SIZE .128"
2. CONTACT PIN TO SOLDER

NO.	DESCRIPTION	MATERIAL	FINISH	Q'TY	DRAWING NO.
7	FERRULE	NOTE 2	NOTE 3	1	FR-63-70-33 -40-150
6	HEX NUT	SS41	NOTE 3	1	HN-11-3832-24
5	LOCK WASHER	NOTE 2	NOTE 3	1	LW-97-127-05
4	INSULATOR	P.P.	NATURAL	1	SH-F130-185
3	CONTACT PIN	NOTE 2	NOTE 4	1	
2	INSULATOR	P.P.	NATURAL	1	
1	BODY	NOTE 1	NOTE 3	1	3832D-6411A1-1

DIMENSIONS ARE IN MILLIMETERS

UNLESS OTHERWISE SPECIFIED TOLERANCES
0.5-6 = ±0.2
6-30 = ±0.4
30-120 = ±0.6
120-315 = ±1
315-1000 = ±1.6
1000-2000 = ±2.4

SCALE 3/1 | ISSUE A

PART NO.

APPROVED DATE 02-21-'12

CHECKED DATE 02-21-'12

DRAWN DATE 02-21-'12

G.L.I.

TITLE
F BULKHEAD CRIMP JACK
(FOR RG-179, 187 CABLE)

DRAWING NO.
3832D-6411A2-03-75

FILE NO. R:\D\G\DWG\3832\D\6411A2\03\75