REVISIONS		
ISS	ZONE	DESCRIPTION\PER REQUEST\DATE

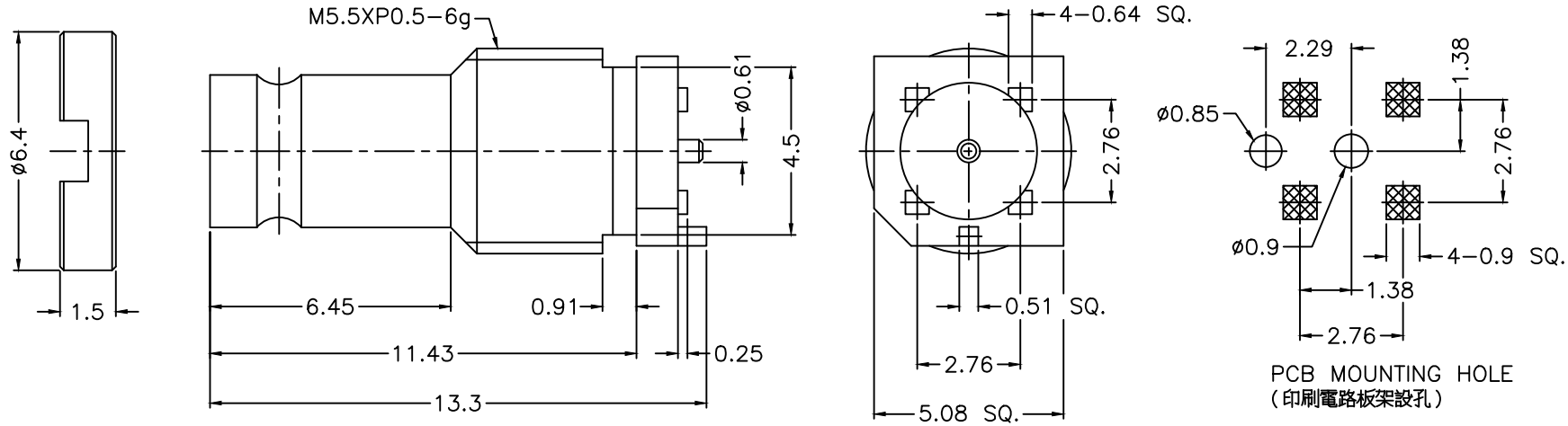

NOTES: FINISH (PLATING THICKNESS IN MICRO−INCHES)
1. BRASS
2. THIN GOLD OVER NICKEL PL. 50 MIN. THICK OVER COPPER PL. 50 MIN. THICK
3. BERYLLIUM COPPER
4. GOLD PL. 3 MIN. THICK OVER NICKEL PL. 50 MIN. THICK OVER COPPER PL. 50 MIN. THICK
5. TEFLON

RoHS COMPLIANT

NO.	DESCRIPTION	MATERIAL	FINISH	Q'TY	DRAWING NO.
4	NUT	NOTE 1	NOTE 2	1	NUT−5505−15
3	CONTACT PIN	NOTE 3	NOTE 4	1	300−6251S1−3
2	INSULATOR	NOTE 5	NATURAL	1	300−6251S1−2 −75T
1	BODY	NOTE 1	NOTE 2	1	300−6251S1−1

DIMENSIONS ARE IN MILLIMETERS

UNLESS OTHERWISE SPECIFIED TOLERANCES
0.5−6 = ±0.2
6−30 = ±0.4
30−120 = ±0.6
120−315 = ±1
315−1000 = ±1.6
1000−2000 = ±2.4

SCALE 6/1 ISSUE A

PART NO.

APPROVED DATE 03−06−'15

CHECKED DATE 03−06−'15

DRAWN DATE 03−06−'15

G.L.I.

TITLE 1.0/2.3 PCB JACK

DRAWING NO. 300−6251S1−75

FILE NO. R:\D\G\DWG\300\6251S1\75