REVISIONS		
ISS	ZONE	DESCRIPTION\PER REQUEST\DATE
B	A-2	NO.2 WAS CHANGED\RD-DM080409003\04-09-'19
C	ALL	DESIGN WAS CHANGED\RD-DM081118002\11-18-'19
C1	A-1	ADDED NO.5\N/A\01-07-'20

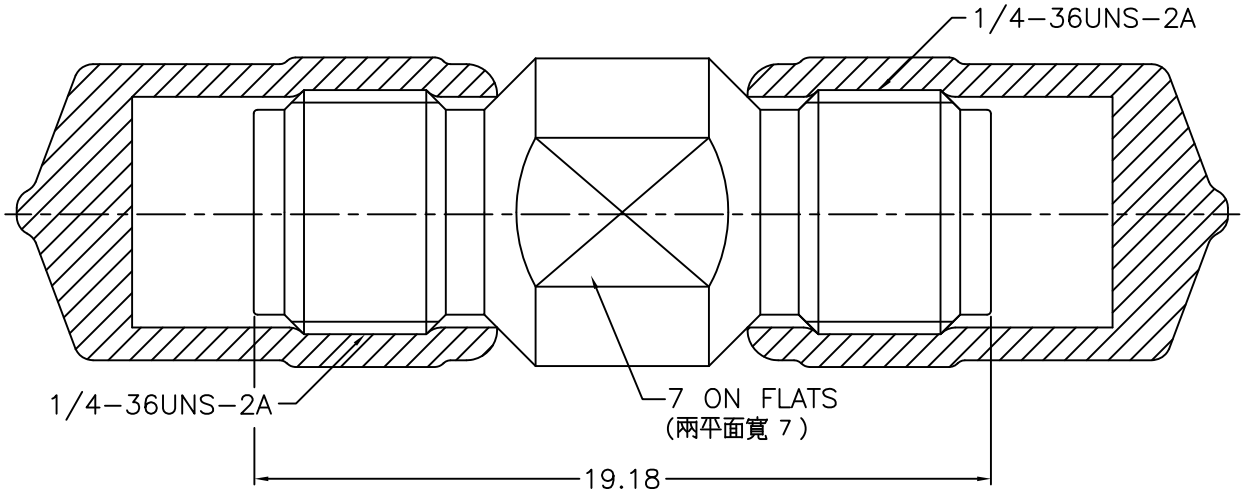

NOTES: FINISH (PLATING THICKNESS IN MICRO-INCHES)
1. BRASS
2. BERYLLIUM COPPER
3. NICKEL PL. 100 MIN. THICK OVER COPPER PL. 50 MIN. THICK
4. GOLD PL. 10 MIN. THICK OVER NICKEL PL. 50 MIN. THICK OVER COPPER PL. 50 MIN. THICK
5. STAINLESS STEEL
6. PASSIVATED
7. ULTEM 1000

RoHS COMPLIANT

NO.	DESCRIPTION	MATERIAL	FINISH	Q'TY	DRAWING NO.
5	PROTECTIVE COVER	PVC	BLACK		
4	BODY	NOTE 5	NOTE 6		
3	RING	NOTE 1	NOTE 3		
2	INSULATOR	NOTE 7	NATURAL		
1	CONTACT PIN	NOTE 2	NOTE 4		

DIMENSIONS ARE IN MILLIMETERS

UNLESS OTHERWISE SPECIFIED TOLERANCES
0.5-6 = ±0.2
6-30 = ±0.4
30-120 = ±0.6
120-315 = ±1
315-1000 = ±1.6
1000-2000 = ±2.4

SCALE 5/1 | ISSUE C1

PART NO.

APPROVED DATE 01-07-'20

CHECKED DATE 01-07-'20

DRAWN DATE 01-07-'20

G.L.I.

TITLE
2.92mm JACK TO JACK ADAPTOR

DRAWING NO.
292-7071SA2-50

FILE NO. R:\D\DWG\292\7071SA2\50-C1