REVISIONS		
ISS	ZONE	DESCRIPTION\PER REQUEST\DATE

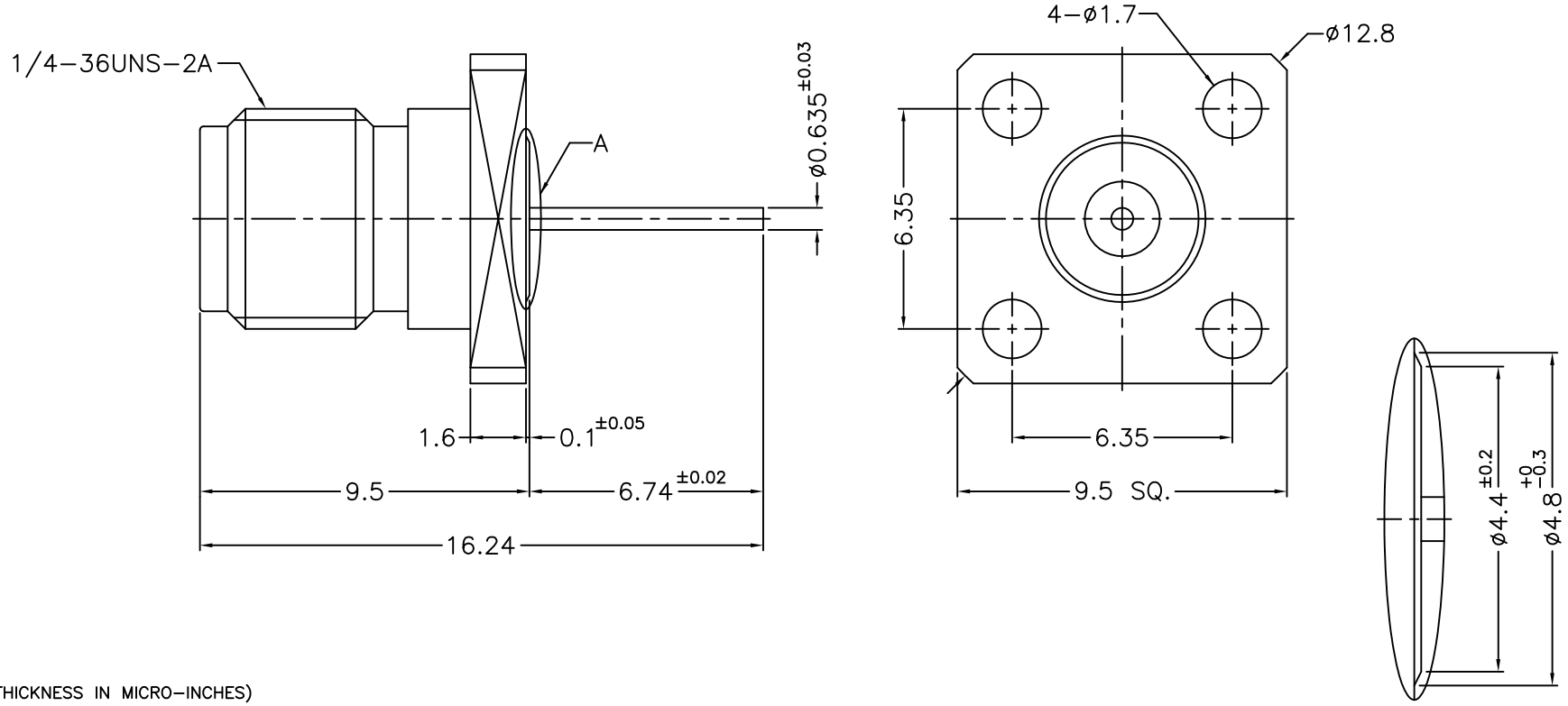

A DETAIL (10/1)
(A 詳圖)

NOTES: FINISH (PLATING THICKNESS IN MICRO-INCHES)
1. STAINLESS STEEL
2. PASSIVATED
3. BERYLLIUM COPPER
4. GOLD PL. 10 MIN. THICK OVER NICKEL PL. 50 MIN. THICK OVER COPPER PL. 50 MIN. THICK
5. ULTEM 1000

RoHS COMPLIANT

NO.	DESCRIPTION	MATERIAL	FINISH	Q'TY	DRAWING NO.
4	BODY	NOTE 1	NOTE 2		
3	RING	NOTE 1	NOTE 2		
2	INSULATOR	NOTE 5	NATURAL		
1	CONTACT PIN	NOTE 3	NOTE 4		

DIMENSIONS ARE IN MILLIMETERS

UNLESS OTHERWISE SPECIFIED TOLERANCES
0.5-6 = ±0.2
6-30 = ±0.4
30-120 = ±0.6
120-315 = ±1
315-1000 = ±1.6
1000-2000 = ±2.4

SCALE 5/1 | ISSUE 1

PART NO.

APPROVED | DATE 01-25-'21

CHECKED | DATE 01-25-'21

DRAWN ALAN | DATE 01-25-'21

G.L.I.

TITLE 2.92mm PANEL RECEPT. JACK

DRAWING NO. 292-6551E1-50

FILE NO. R:\D\DWG\292\6551E1\50