REVISIONS		
ISS	ZONE	DESCRIPTION\PER REQUEST\DATE

FREQUENCY RANGE		DC–27GHz
IMPEDANCE (CODE)		50ohm
VSWR	DC–<18GHz	<1.15
	18–<27GHz	<1.2

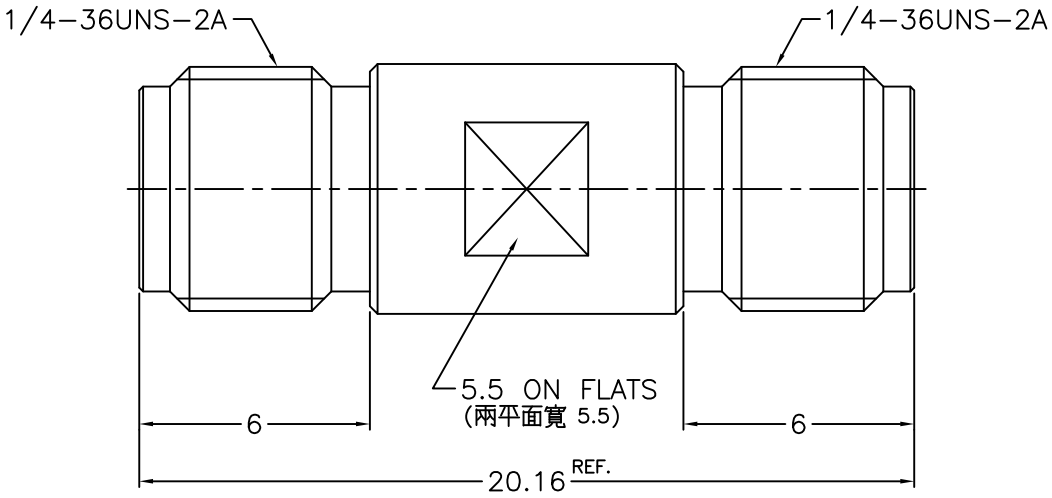

NOTES: FINISH (PLATING THICKNESS IN MICRO–INCHES)
1. STAINLESS STEEL
2. BERYLLIUM COPPER
3. GOLD PL. 10 MIN. THICK OVER NICKEL PL. 50MIN. THICK OVER COPPER PL. 50 MIN. THICK
4. PASSIVATE
5. PTFE

RoHS COMPLIANT

NO.	DESCRIPTION	MATERIAL	FINISH	Q'TY	DRAWING NO.
4	INSULATOR	NOTE 5	NATURAL		
3	CONTACT PIN	NOTE 2	NOTE 3		
2	INSULATOR	NOTE 5	NATURAL		
1	BODY	NOTE 1	NOTE 4		

DIMENSIONS ARE IN MILLIMETERS

UNLESS OTHERWISE SPECIFIED TOLERANCES
0.5–6 = ±0.2
6–30 = ±0.4
30–120 = ±0.6
120–315 = ±1
315–1000 = ±1.6
1000–2000 = ±2.4

SCALE 5/1 | ISSUE 3

PART NO.

APPROVED | DATE 02–23–'21

CHECKED | DATE 02–23–'21

DRAWN ANGELA | DATE 02–23–'21

G.L.I.

TITLE
SMA JACK TO JACK ADAPTOR (27GHz)

DRAWING NO.
1436–7071SA5–50

FILE NO. R:\D\DWG\1436\7071SA5\50