REVISIONS		
ISS	ZONE	DESCRIPTION\PER REQUEST\DATE
B	D-3	DESIGN WAS CHANGED\RD-DM081205003\12-05-'19
B1	F-5	ADDED NOTE\N/A\02-26-'21

NOTE : NO.3 MUST WITHSTAND A 0.2 KG-CM MIN.
TORQUE FROM NO.1.
（零件 3 與零件 1 間須承受至少 0.2 公斤－公分的扭力）

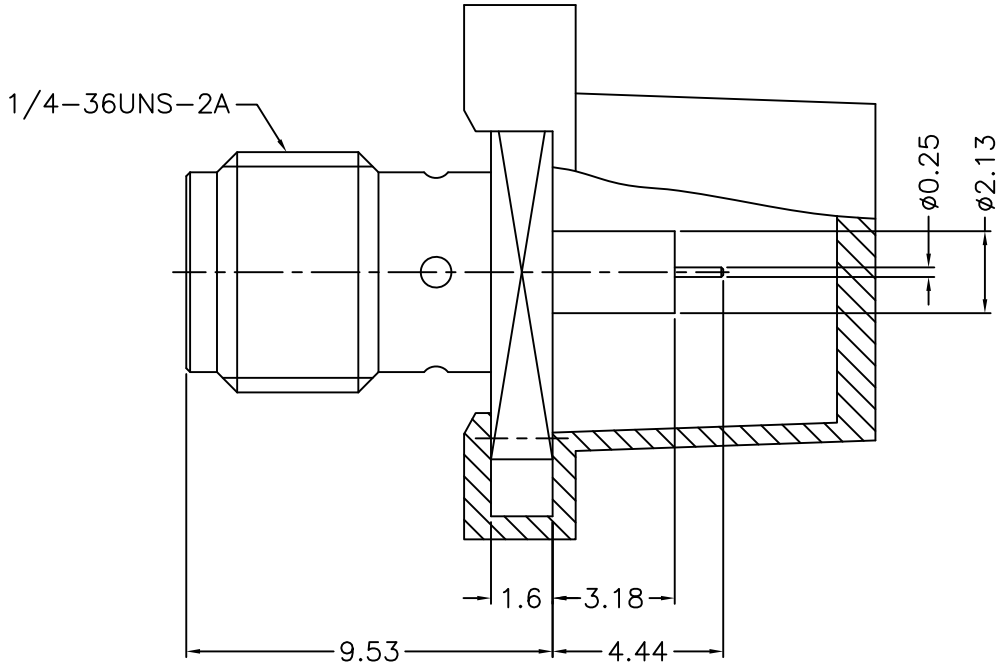

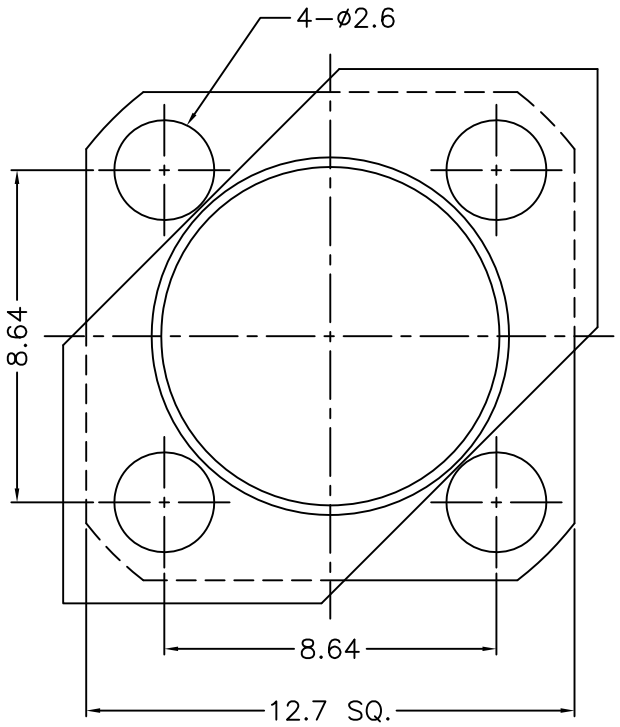

NOTES: FINISH (PLATING THICKNESS IN MICRO-INCHES)
1. BRASS
2. NICKEL PL. 100 MIN. THICK OVER COPPER PL. 50 MIN. THICK
3. BERYLLIUM COPPER
4. GOLD PL. 3 MIN. THICK OVER NICKEL PL. 50 MIN. THICK OVER COPPER PL. 50 MIN. THICK
5. PTFE

RoHS COMPLIANT

NO.	DESCRIPTION	MATERIAL	FINISH	Q'TY	DRAWING NO.
4	COVER	PE	NATURAL		
3	CONTACT PIN	NOTE 3	NOTE 4		
2	INSULATOR	NOTE 5	NATURAL		
1	BODY	NOTE 1	NOTE 2		

DIMENSIONS ARE IN MILLIMETERS

UNLESS OTHERWISE SPECIFIED TOLERANCES
0.5-6 = ±0.2
6-30 = ±0.4
30-120 = ±0.6
120-315 = ±1
315-1000 = ±1.6
1000-2000 = ±2.4

SCALE 5/1 | ISSUE B1

PART NO.

APPROVED DATE 02-26-'21

CHECKED DATE 02-26-'21

DRAWN DATE 02-26-'21

G.L.I.

TITLE
SMA PANEL RECEPT. JACK

DRAWING NO.
1436-6551E24-50

FILE NO. R:\D\G\DWG\1436\6551E24\50-B1