REVISIONS		
ISS	ZONE	DESCRIPTION\PER REQUEST\DATE

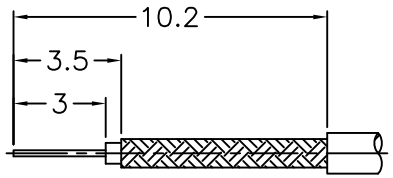

RECOMMENDED
CABLE STRIPPING DIM'S
（建議剝線尺寸）

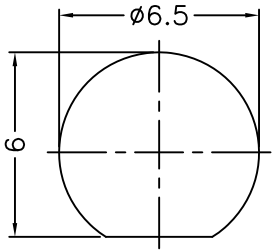

RECOMMENDED
MOUNTING HOLE
（建議架設孔）

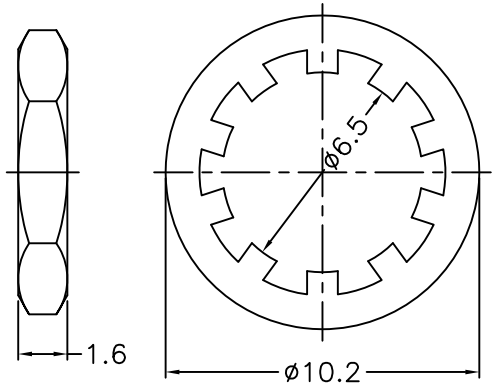

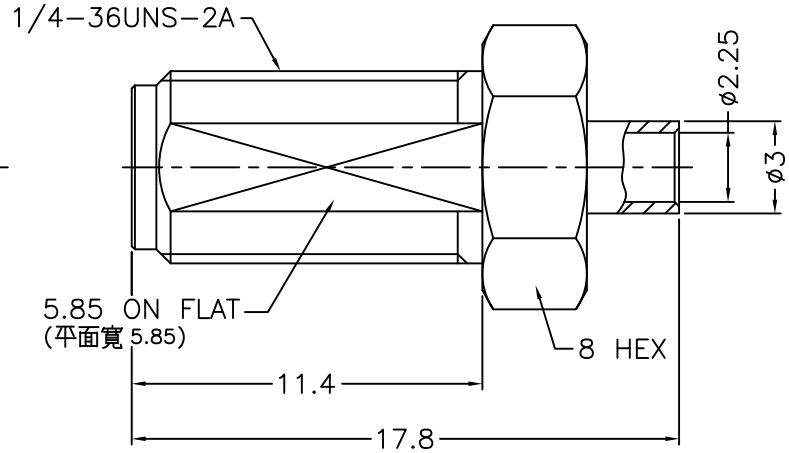

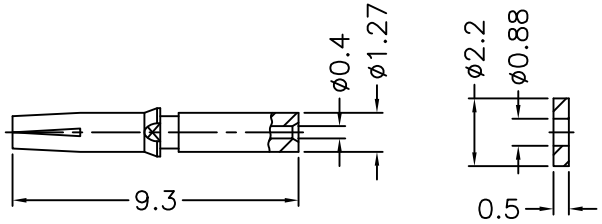

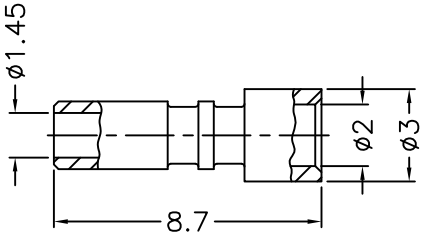

1. CRIMPED FERRULE
   HEX CRIMP SIZE .1"
2. CONTACT PIN TO SOLDER
3. MAX. PANEL THICKNESS=3.2mm

NOTES: FINISH (PLATING THICKNESS IN MICRO-INCHES)
1. BRASS
2. THIN GOLD OVER NICKEL PL. 50 MIN. THICK OVER COPPER PL. 50 MIN. THICK
3. BERYLLIUM COPPER
4. GOLD PL. 3 MIN. THICK OVER NICKEL PL. 50 MIN. THICK OVER COPPER PL. 50 MIN. THICK
5. PTFE

RoHS COMPLIANT

NO.	DESCRIPTION	MATERIAL	FINISH	Q'TY	DRAWING NO.
7	HEX NUT	NOTE 1	NOTE 2		
6	LOCK WASHER	NOTE 1	NOTE 2		
5	FERRULE	NOTE 1	NOTE 2		
4	INSULATOR	NOTE 5	NATURAL		
3	CONTACT PIN	NOTE 3	NOTE 4		
2	INSULATOR	NOTE 5	NATURAL		
1	BODY	NOTE 1	NOTE 2		

DIMENSIONS ARE IN MILLIMETERS

UNLESS OTHERWISE SPECIFIED TOLERANCES
0.5–6 = ±0.2
6–30 = ±0.4
30–120 = ±0.6
120–315 = ±1
315–1000 = ±1.6
1000–2000 = ±2.4

SCALE 4/1 | ISSUE A

PART NO.

APPROVED DATE 10-22-'20

CHECKED DATE 10-22-'20

DRAWN DATE 10-22-'20

G.L.I.

TITLE
SMA BULKHEAD JACK
(FOR RG-178, 196 CABLE)

DRAWING NO.
1436-6411U5-01-50

FILE NO. R:\D\DWG\1436\6411U5\01\50