REVISIONS		
ISS	ZONE	DESCRIPTION\PER REQUEST\DATE
A1	B-2	HEAT SHRINK TUBING WAS CANCELLED\N/A\08-25-'10

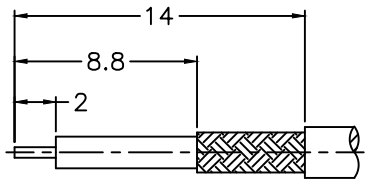

RECOMMENDED
CABLE STRIPPING DIM'S
（建議剝線尺寸）

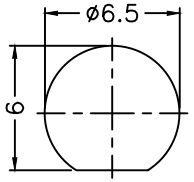

RECOMMENDED
MOUNTING HOLE
（建議架設孔）

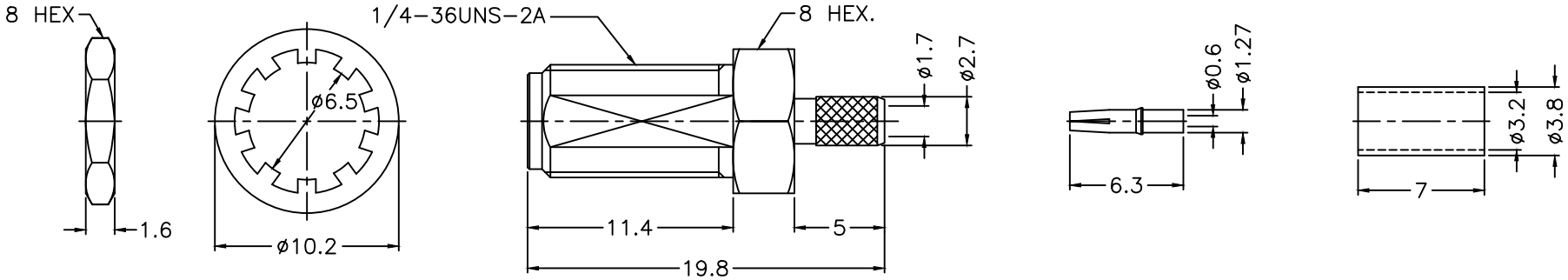

NOTES: FINISH (PLATING THICKNESS IN MICRO-INCHES)
1. BRASS
2. THIN GOLD OVER NICKEL PL. 50 MIN. THICK OVER COPPER PL. 50 MIN. THICK
3. BERYLLIUM COPPER
4. TEFLON
5. GOLD PL. 3 MIN. THICK OVER NICKEL PL. 50 MIN. THICK OVER COPPER PL. 50 MIN. THICK

1. CRIMPED FERRULE
   HEX CRIMP SIZE .128"
2. CONTACT PIN TO SOLDER

NO.	DESCRIPTION	MATERIAL	FINISH	Q'TY	DRAWING NO.
7	FERRULE	NOTE 1	NOTE 2	1	FR-32-38-70
6	CONTACT PIN	NOTE 3	NOTE 5	1	1436-6411A2-6-0.6
5	HEX NUT	NOTE 1	NOTE 2	1	HN-8-1436-16
4	LOCK WASHER	NOTE 1	NOTE 2	1	LW-65-102-05
3	RING	NOTE 1	NOTE 2	1	1436-6411A2-3
2	INSULATOR	NOTE 4	NATURAL	1	1436-6411A2-2-50T
1	BODY	NOTE 1	NOTE 2	1	1436-6411A2-1-02

DIMENSIONS ARE IN MILLIMETERS

UNLESS OTHERWISE SPECIFIED TOLERANCES
0.5-6 = ±0.2
6-30 = ±0.4
30-120 = ±0.6
120-315 = ±1
315-1000 = ±1.6
1000-2000 = ±2.4

SCALE 3/1 | ISSUE A1

PART NO.

APPROVED | DATE 08-25-'10

CHECKED | DATE 08-25-'10

DRAWN | DATE 08-25-'10

G.L.I.

TITLE
SMA BULKHEAD CRIMP JACK
(FOR RG-174,188A,316, LMR100)

DRAWING NO. 1436-6411A2-02-50

FILE NO. R:\D\G\DWG\1436\6411A2\02\50