REVISIONS		
ISS	ZONE	DESCRIPTION\PER REQUEST\DATE

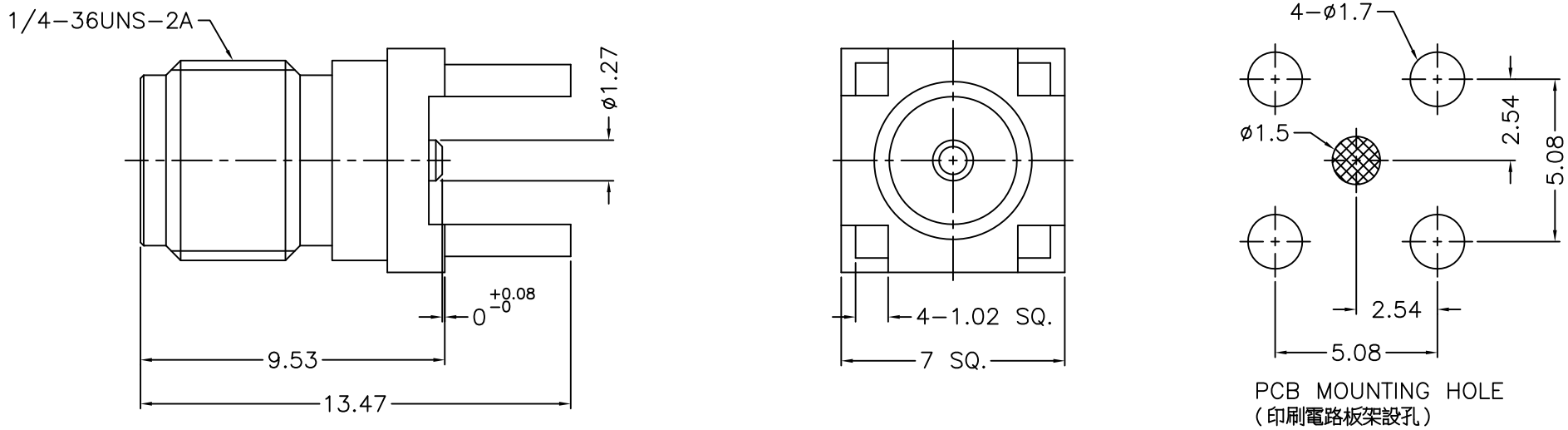

NOTES: FINISH (PLATING THICKNESS IN MICRO-INCHES)
1. BRASS
2. THIN GOLD OVER NICKEL PL. 50 MIN. THICK OVER COPPER PL. 50 MIN. THICK
3. BERYLLIUM COPPER
4. GOLD PL. 30 MIN. THICK OVER NICKEL PL. 50 MIN. THICK OVER COPPER PL. 50 MIN. THICK
5. TEFLON

NO.	DESCRIPTION	MATERIAL	FINISH	Q'TY	DRAWING NO.
5	RING	NOTE 1	NOTE 2	1	1436-6551E2-5
4	INSULATOR	NOTE 5	NATURAL	1	1436-6251A1-4
3	CONTACT PIN	NOTE 3	NOTE 4	1	1436-6251A13-3
2	INSULATOR	NOTE 5	NATURAL	1	1436-6551E2-2 -50T
1	BODY	NOTE 1	NOTE 2	1	1436-6251A1-1

DIMENSIONS ARE IN MILLIMETERS

UNLESS OTHERWISE SPECIFIED TOLERANCES
0.5-6 = ±0.2
6-30 = ±0.4
30-120 = ±0.6
120-315 = ±1
315-1000 = ±1.6
1000-2000 = ±2.4

SCALE	5/1	ISSUE	2

PART NO.	132134-15		
APPROVED		DATE	01-21-'16
CHECKED		DATE	01-21-'16
DRAWN	ANGELA	DATE	01-21-'16

G.L.I.

TITLE: SMA P.C.B. JACK

DRAWING NO. 1436-6251A13-50

FILE NO. R:\D\G\DWG\1436\6251A13\50