REVISIONS		
ISS	ZONE	DESCRIPTION\PER REQUEST\DATE

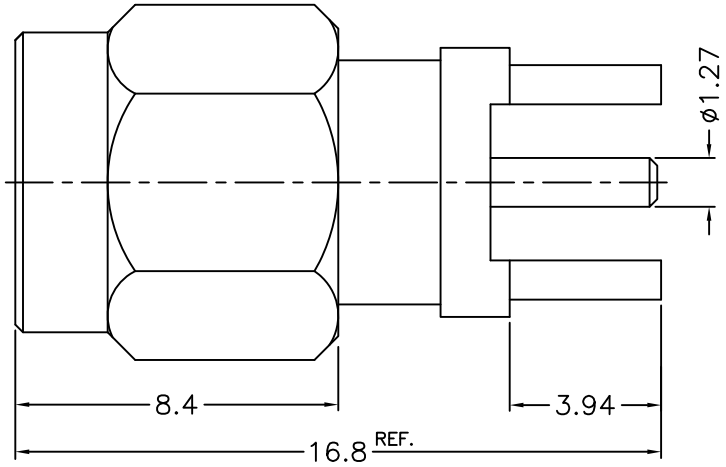

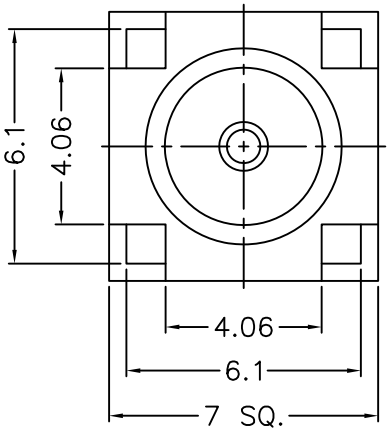

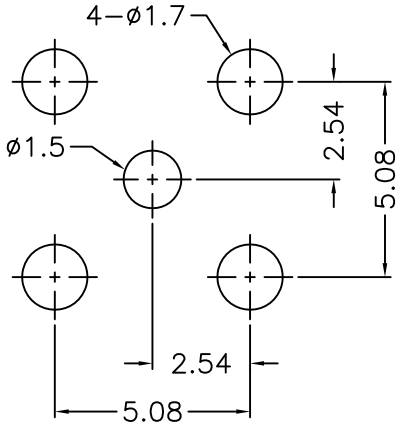

PCB MOUNTING HOLE
(印刷電路板架設孔)

NOTES: FINISH (PLATING THICKNESS IN MICRO–INCHES)
1. BRASS
2. THIN GOLD OVER NICKEL PL. 50 MIN. THICK OVER COPPER PL. 50 MIN. THICK
3. GOLD PL. 3 MIN. THICK OVER NICKEL PL. 50 MIN. THICK OVER COPPER PL. 50 MIN. THICK
4. TEFLON

RoHS COMPLIANT

NO.	DESCRIPTION	MATERIAL	FINISH	Q'TY	DRAWING NO.
8	GASKET	SILICONE	RED	1	GS–43–60–06
7	RETAINER RING	SUS 304	NATURAL	1	1436–1000–4
6	RING	NOTE 1	NOTE 2	1	1436–6250–5
5	INSULATOR	NOTE 4	NATURAL	1	1436–6251A1–4
4	CONTACT PIN	NOTE 1	NOTE 3	1	1436–1251A1–4
3	INSULATOR	NOTE 4	NATURAL	1	1436–1551D1–3 –50T
2	BODY	NOTE 1	NOTE 2	1	1436–1251A1–2
1	SHELL	NOTE 1	NOTE 2	1	1436–1000–1

DIMENSIONS ARE IN MILLIMETERS

UNLESS OTHERWISE SPECIFIED TOLERANCES
0.5–6 = ±0.2
6–30 = ±0.4
30–120 = ±0.6
120–315 = ±1
315–1000 = ±1.6
1000–2000 = ±2.4

SCALE	5/1	ISSUE	A

PART NO.

APPROVED	DATE 04–19–'16
CHECKED	DATE 04–19–'16
DRAWN	DATE 04–19–'16

G.L.I.

TITLE
SMA P.C. MOUNT PLUG

DRAWING NO.
1436–1251A1–50

FILE NO. R:\D\G\DWG\1436\1251A1\50