REVISIONS		
ISS	ZONE	DESCRIPTION\PER REQUEST\DATE

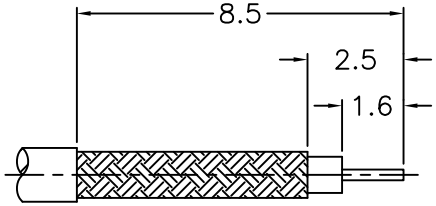

RECOMMENDED
CABLE STRIPPING DIM'S
（建議剝線尺寸）

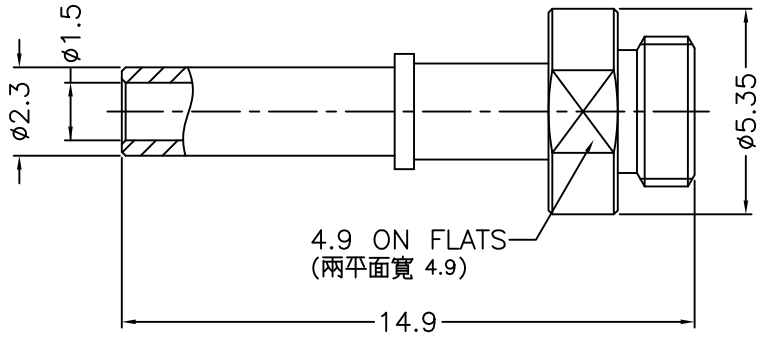

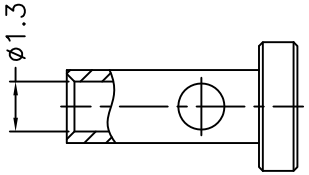

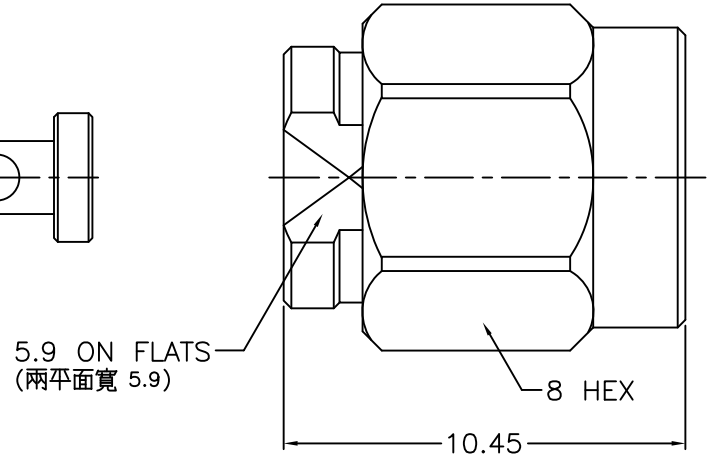

NOTES: FINISH (PLATING THICKNESS IN MICRO-INCHES)
1. BRASS
2. THIN GOLD OVER NICKEL PL. 50 MIN. THICK OVER COPPER PL. 50 MIN. THICK
3. BERYLLIUM COPPER
4. GOLD PL. 3 MIN. THICK OVER NICKEL PL. 50 MIN. THICK OVER COPPER PL. 50 MIN. THICK
5. NICKEL PL. 100 MIN. THICK OVER COPPER PL. 50 MIN. THICK
6. PTFE
7. STAINLESS STEEL
8. PASSIVATED

RoHS COMPLIANT

NO.	DESCRIPTION	MATERIAL	FINISH	Q'TY	DRAWING NO.
8	NUT	NOTE 1	NOTE 5		
7	BRAID HOLDER	NOTE 1	NOTE 2		
6	SHELL	NOTE 7	NOTE 8		
5	RETAINER RING	NOTE 3	NOTE 5		
4	GASKET	SILICONE	RED		
3	CONTACT PIN	NOTE 3	NOTE 4		
2	INSULATOR	NOTE 6	NATURAL		
1	BODY	NOTE 7	NOTE 8		

DIMENSIONS ARE IN MILLIMETERS

UNLESS OTHERWISE SPECIFIED TOLERANCES
0.5–6 = ±0.2
6–30 = ±0.4
30–120 = ±0.6
120–315 = ±1
315–1000 = ±1.6
1000–2000 = ±2.4

SCALE 5/1 | ISSUE 1

PART NO.

APPROVED | DATE 03–16–'21

CHECKED | DATE 03–16–'21

DRAWN ALAN | DATE 03–16–'21

G.L.I.

TITLE
SMA SOLDER CLAMP PLUG
(FOR .047" CABLE)

DRAWING NO.
1436–1181S19–33–50

FILE NO. R:\D\DWG\1436\1181S19\33\50