REVISIONS		
ISS	ZONE	DESCRIPTION\PER REQUEST\DATE

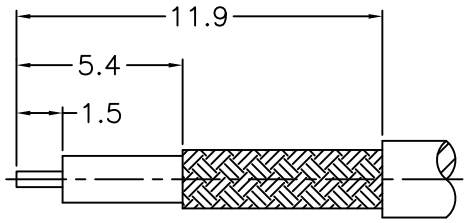

RECOMMENDED
CABLE STRIPPING DIM'S
（建議剝線尺寸）

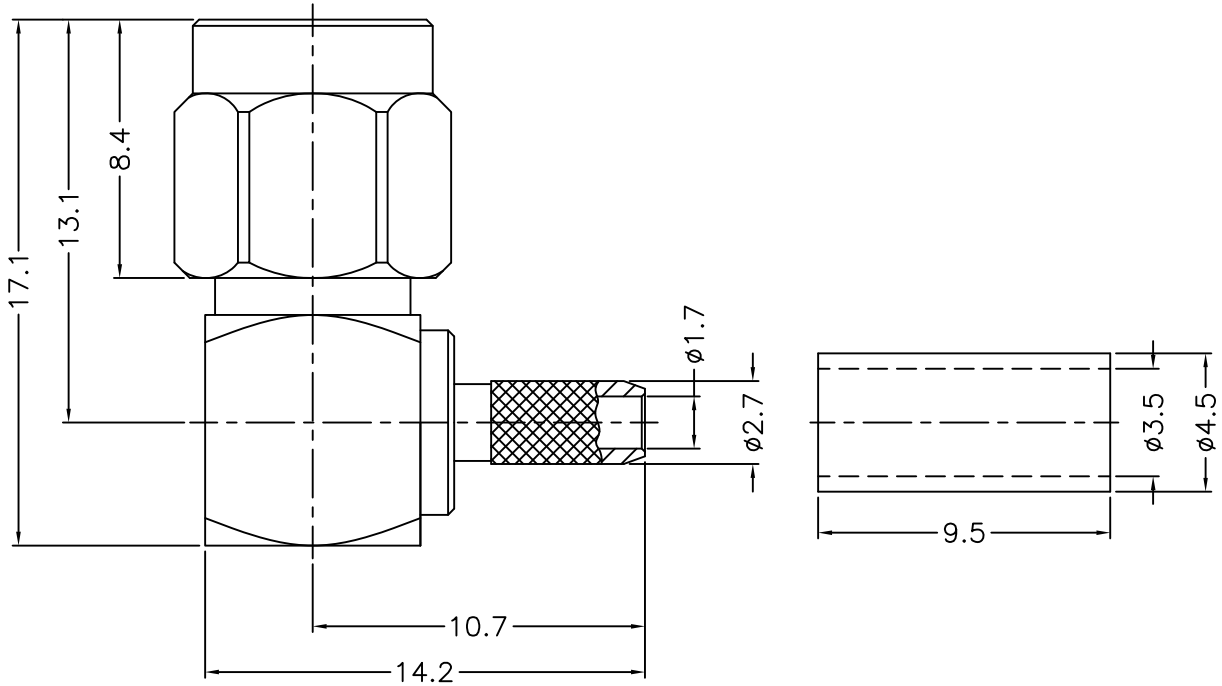

NOTES: FINISH (PLATING THICKNESS IN MICRO-INCHES)
1. BRASS
2. THIN GOLD OVER NICKEL PL. 50 MIN. THICK OVER COPPER PL. 50 MIN. THICK
3. GOLD PL. 3 MIN. THICK OVER NICKEL PL. 50 MIN. THICK OVER COPPER PL. 50 MIN. THICK
4. PTFE
5. PASSIVATED

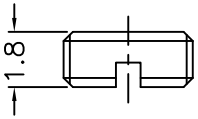

RoHS COMPLIANT

1. CRIMPED FERRULE
   HEX CRIMP SIZE .150"
2. CONTACT PIN TO SOLDER

NO.	DESCRIPTION	MATERIAL	FINISH	Q'TY	DRAWING NO.
8	FERRULE	COPPER	NOTE 2		
7	COVER	NOTE 1	NOTE 2		
6	GASKET	SILICONE	RED		
5	RETAINER RING	SUS 304	NOTE 5		
4	CONTACT PIN	NOTE 1	NOTE 3		
3	INSULATOR	NOTE 4	NATURAL		
2	HOUSING WITH BARREL	NOTE 1	NOTE 2		
1	SHELL	NOTE 1	NOTE 2		

DIMENSIONS ARE IN MILLIMETERS

UNLESS OTHERWISE SPECIFIED TOLERANCES
0.5–6 = ±0.2
6–30 = ±0.4
30–120 = ±0.6
120–315 = ±1
315–1000 = ±1.6
1000–2000 = ±2.4

SCALE	4/1	ISSUE	A

PART NO.

APPROVED	DATE	10–14–'19
CHECKED	DATE	10–14–'19
DRAWN	DATE	10–14–'19

G.L.I.

TITLE
SMA R/A CRIMP PLUG
(FOR RG–316U/D CABLE)

DRAWING NO.
1436–1112C1–04–50

FILE NO. R:\D\G\DWG\1436\1112C1\04\50