REVISIONS		
ISS	ZONE	DESCRIPTION\PER REQUEST\DATE

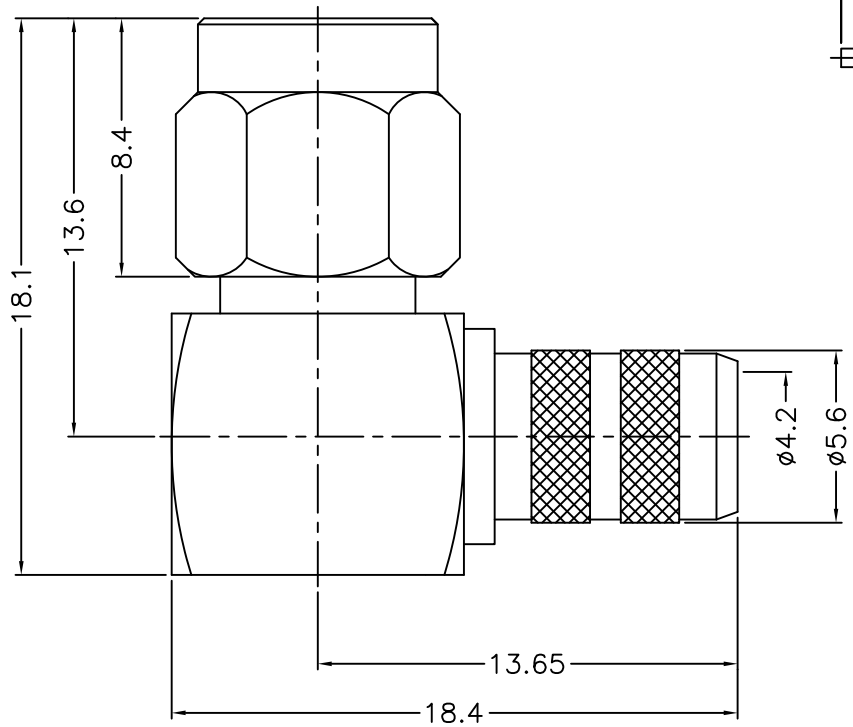

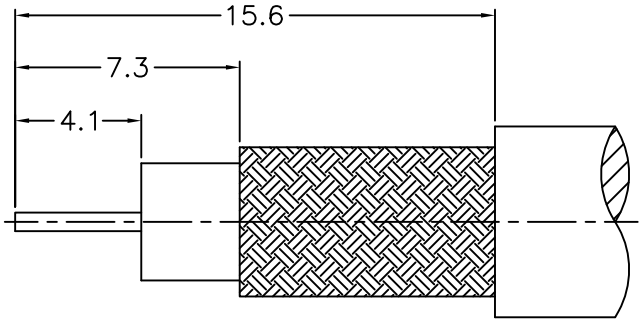

RECOMMENDED
CABLE STRIPPING DIM'S
(建議剝線尺寸)

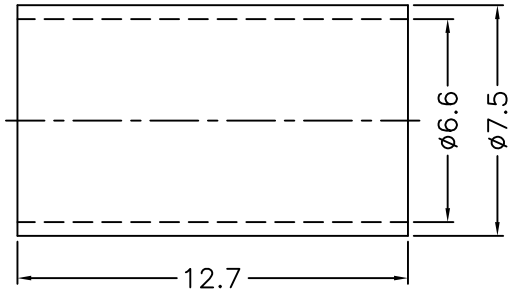

NOTES: FINISH (PLATING THICKNESS IN MICRO-INCHES)
1. BRASS
2. THIN GOLD THICK OVER NICKEL PL. 50 MIN. THICK OVER COPPER PL. 50 MIN. THICK
3. GOLD PL. 3 MIN. THICK OVER NICKEL PL. 50 MIN. THICK OVER COPPER PL. 50 MIN. THICK
4. TEFLON

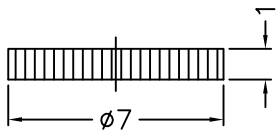

1. CRIMPED FERRULE
HEX CRIMP SIZE .255"

NO.	DESCRIPTION	MATERIAL	FINISH	Q'TY	DRAWING NO.
8	FERRULE	NOTE 1	NOTE 2	1	FR-66-75-127
7	COVER	NOTE 1	NOTE 2	1	CV-7-1
6	GASKET	SILICONE	RED	1	GS-43-60-06
5	RETAINER RING	SUS 303	NATURAL	1	1436-1000-4
4	CONTACT PIN	NOTE 1	NOTE 3	1	1436-1112A2-4
3	INSULATOR	NOTE 4	NATURAL	1	1436-1112A2-3 -50T
2	HOUSING WITH BARREL	NOTE 1	NOTE 2	1	1436-1112A2-2 -16
1	SHELL	NOTE 1	NOTE 2	1	1436-1000-1

DIMENSIONS ARE IN MILLIMETERS

UNLESS OTHERWISE SPECIFIED TOLERANCES
0.5-6 = ±0.2
6-30 = ±0.4
30-120 = ±0.6
120-315 = ±1
315-1000 = ±1.6
1000-2000 = ±2.4

SCALE	4/1	ISSUE	A

PART NO.

APPROVED	DATE	05-31-'12
CHECKED	DATE	05-31-'12
DRAWN	DATE	05-31-'12

G.L.I.

TITLE
SMA R/A CRIMP PLUG
(FOR 8X, LMR-240 CABLE)

DRAWING NO.
1436-1112A2-16-50

FILE NO. R:\D\G\DWG\1436\1112A2\16\50