REVISIONS		
ISS	ZONE	DESCRIPTION\PER REQUEST\DATE

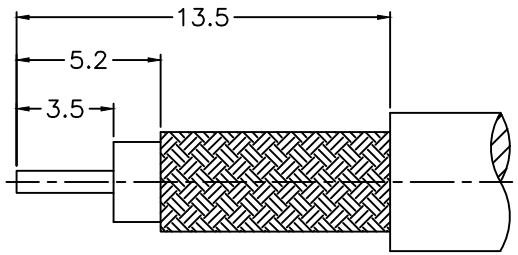

RECOMMENDED
CABLE STRIPPING DIM'S
（建議剝線尺寸）

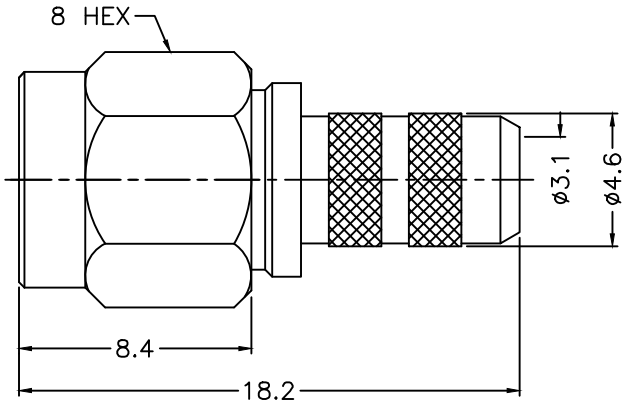

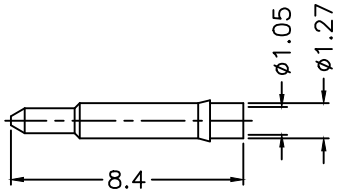

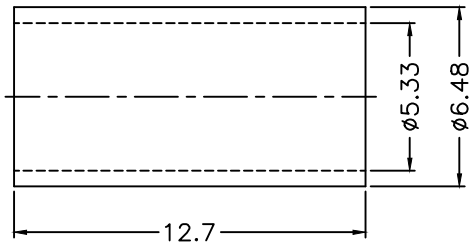

NOTES: FINISH (PLATING THICKNESS IN MICRO-INCHES)
1. BRASS
2. THIN GOLD OVER NICKEL PL. 50 MIN. THICK OVER COPPER PL. 50 MIN. THICK
3. GOLD PL. 3 MIN. THICK OVER NICKEL PL. 50 MIN. THICK OVER COPPER PL. 50 MIN. THICK
4. TEFLON

1. CRIMPED FERRULE
HEX CRIMP SIZE .213"

NO.	DESCRIPTION	MATERIAL	FINISH	Q'TY	DRAWING NO.
7	FERRULE	COPPER	NOTE 2	1	FR-533-648-127C
6	CONTACT PIN	NOTE 1	NOTE 3	1	1436-1111A2-6 -1.05
5	GASKET	SILICONE	RED	1	GS-43-60-06
4	RETAINER RING	SUS 303	NATURAL	1	1436-1000-4
3	INSULATOR	NOTE 4	NATURAL	1	1436-1111A2-3 -50T
2	BODY	NOTE 1	NOTE 2	1	1436-1111A2-2 -06
1	SHELL	NOTE 1	NOTE 2	1	1436-1000-1

DIMENSIONS ARE IN MILLIMETERS

UNLESS OTHERWISE SPECIFIED TOLERANCES
0.5-6 = ±0.2
6-30 = ±0.4
30-120 = ±0.6
120-315 = ±1
315-1000 = ±1.6
1000-2000 = ±2.4

SCALE 4/1 | ISSUE A

PART NO.

APPROVED DATE 06-09-'11

CHECKED DATE 06-09-'11

DRAWN DATE 06-09-'11

G.L.I.

TITLE
SMA CRIMP PLUG
(FOR RG-58, 58A, 58C, 141, LMR195)

DRAWING NO. 1436-1111B2-06-50

FILE NO. R:\D\G\DWG\1436\1111B2\06\50