REVISIONS		
ISS	ZONE	DESCRIPTION\PER REQUEST\DATE

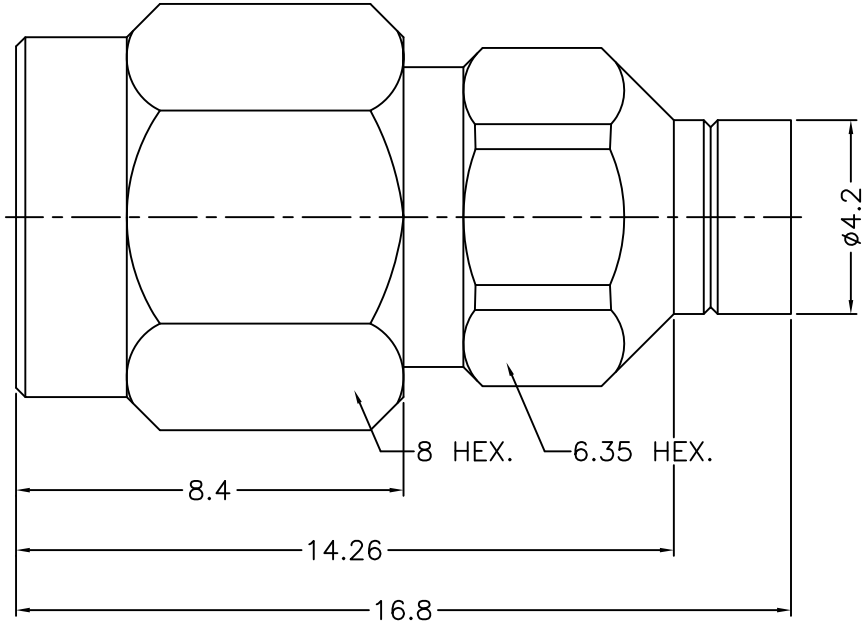

NOTES: FINISH (PLATING THICKNESS IN MICRO-INCHES)
1. BRASS
2. GOLD PL. 30 MIN. THICK OVER NICKEL PL. 50 MIN. THICK OVER COPPER PL. 50 MIN. THICK
3. STAINLESS STEEL
4. PASSIVATED
5. PTFE

RoHS COMPLIANT

NO.	DESCRIPTION	MATERIAL	FINISH	Q'TY	DRAWING NO.
6	SHELL	NOTE 3	NOTE 4	1	
5	RETAINER RING	SUS 304	NOTE 4	1	
4	GASKET	SILICONE	RED	1	
3	CONTACT PIN	NOTE 1	NOTE 2	1	
2	INSULATOR	NOTE 5	NATURAL	1	
1	BODY	NOTE 3	NOTE 4	1	

DIMENSIONS ARE IN MILLIMETERS

UNLESS OTHERWISE SPECIFIED TOLERANCES
0.5–6 = ±0.2
6–30 = ±0.4
30–120 = ±0.6
120–315 = ±1
315–1000 = ±1.6
1000–2000 = ±2.4

SCALE 6/1 ISSUE A

PART NO.

APPROVED DATE 07–15–'19

CHECKED DATE 07–15–'19

DRAWN DATE 07–15–'19

G.L.I.

TITLE SMA PLUG TO SMP LIMITED DETENT JACK(M) ADAPTOR

DRAWING NO. 100–SMAM1–SMPM–50

FILE NO. R:\D\G\DWG\100\SMAM1–SMPM\50