REVISIONS		
ISS	ZONE	DESCRIPTION\PER REQUEST\DATE

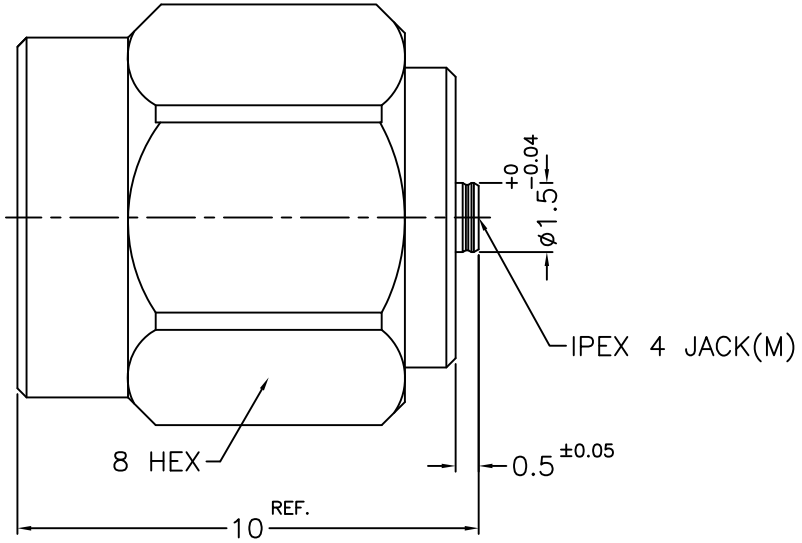

NOTES: FINISH (PLATING THICKNESS IN MICRO–INCHES)
1. STAINLESS STEEL
2. PASSIVATED
3. BRASS
4. GOLD PL. 3 MIN. THICK OVER NICKEL PL. 50 MIN. THICK OVER COPPER PL. 50 MIN. THICK
5. PTFE

RoHS COMPLIANT

NO.	DESCRIPTION	MATERIAL	FINISH	Q'TY	DRAWING NO.
6	SHELL	NOTE 1	NOTE 2		
5	RETAINER RING	SUS 304	NOTE 2		
4	GASKET	SILICONE	RED		
3	CONTACT PIN	NOTE 3	NOTE 4		
2	INSULATOR	NOTE 5	NATURAL		
1	BODY	NOTE 1	NOTE 2		

DIMENSIONS ARE IN MILLIMETERS

UNLESS OTHERWISE SPECIFIED TOLERANCES
0.5–6 = ±0.2
6–30 = ±0.4
30–120 = ±0.6
120–315 = ±1
315–1000 = ±1.6
1000–2000 = ±2.4

SCALE 6/1 ISSUE 1

PART NO.

APPROVED DATE 01–28–'21

CHECKED DATE 01–28–'21

DRAWN ANGELA DATE 01–28–'21

G.L.I.

TITLE
SMA PLUG TO IPEX GEN4 JACK(M) ADAPTOR

DRAWING NO.
100–SMAM–IPEX4M1–50

FILE NO. R:\D\DWG\100\SMAM\IPEX4M1\50