REVISIONS		
ISS	ZONE	DESCRIPTION\PER REQUEST\DATE

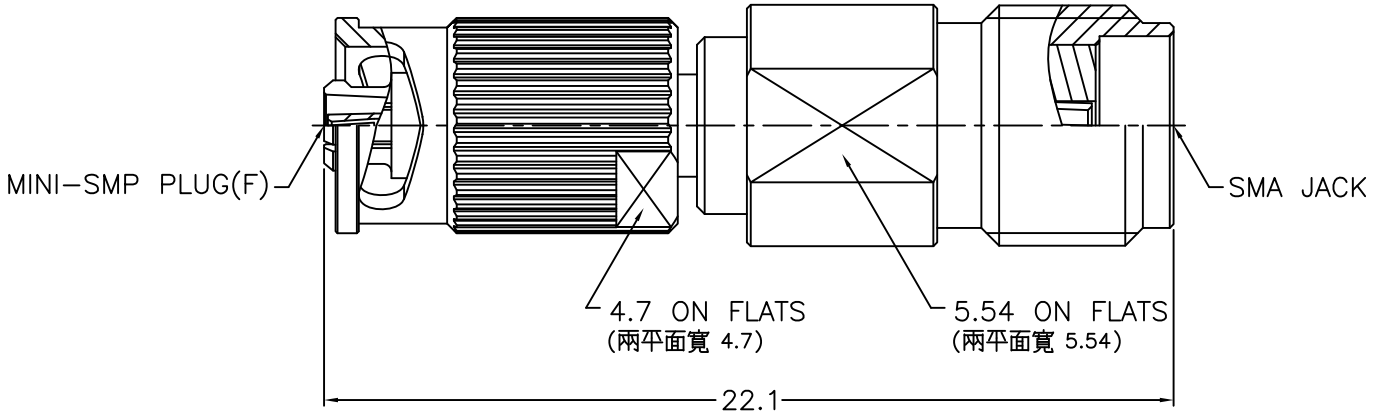

NOTES: FINISH (PLATING THICKNESS IN MICRO–INCHES)
1. BERYLLIUM COPPER
2. STAINLESS STEEL
3. GOLD PL. 3 MIN. THICK OVER NICKEL PL. 50 MIN. THICK OVER COPPER PL. 50 MIN. THICK
4. PTFE
5. PASSIVATED

RoHS COMPLIANT

NO.	DESCRIPTION	MATERIAL	FINISH	Q'TY	DRAWING NO.
7	BODY	NOTE 2	NOTE 5		
6	SHELL	NOTE 2	NOTE 5		
5	SPRING	NOTE 2	NOTE 5		
4	OUT CONTACT	NOTE 1	NOTE 3		
3	INSULATOR	NOTE 4	NATURAL		
2	INSULATOR	NOTE 4	NATURAL		
1	CONTACT PIN	NOTE 1	NOTE 3		

DIMENSIONS ARE IN MILLIMETERS
UNLESS OTHERWISE SPECIFIED TOLERANCES
0.5–6 = ±0.2
6–30 = ±0.4
30–120 = ±0.6
120–315 = ±1
315–1000 = ±1.6
1000–2000 = ±2.4

SCALE 5/1 | ISSUE 1

PART NO.

APPROVED | DATE 04–20–'21

CHECKED | DATE 04–20–'21

DRAWN BRIAN | DATE 04–20–'21

G.L.I.

TITLE
SMA JACK TO MINI–SMP PLUG(F) ADAPTOR

DRAWING NO.
100–SMAF–SMPMF1–50

FILE NO. R:\D\DWG\100\SMAF\SMPMF1\50