REVISIONS		
ISS	ZONE	DESCRIPTION\PER REQUEST\DATE

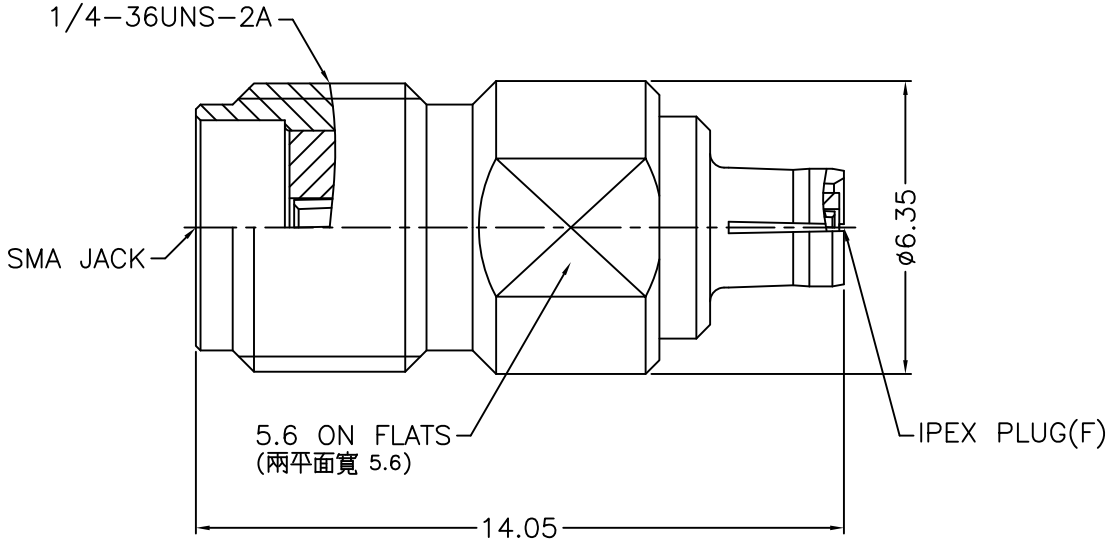

NOTES: FINISH (PLATING THICKNESS IN MICRO-INCHES)
1. BRASS
2. BERYLLIUM COPPER
3. GOLD PL. 3 MIN. THICK OVER NICKEL PL. 50 MIN. THICK OVER COPPER PL. 50 MIN. THICK
4. PTFE

RoHS COMPLIANT

NO.	DESCRIPTION	MATERIAL	FINISH	Q'TY	DRAWING NO.
4	CONTACT PIN	NOTE 2	NOTE 3		
3	INSULATOR	NOTE 4	NATURAL		
2	BODY	NOTE 2	NOTE 3		
1	HOUSING	NOTE 1	NOTE 3		

DIMENSIONS ARE IN MILLIMETERS

UNLESS OTHERWISE SPECIFIED TOLERANCES
0.5–6 = ±0.2
6–30 = ±0.4
30–120 = ±0.6
120–315 = ±1
315–1000 = ±1.6
1000–2000 = ±2.4

SCALE 6/1 ISSUE A

PART NO.

APPROVED DATE 08-26-'21

CHECKED DATE 08-26-'21

DRAWN DATE 08-26-'21

G.L.I.

TITLE
SMA JACK TO IPEX PLUG(F) ADAPTOR

DRAWING NO.
100-SMAF-IPEXF1-50

FILE NO. R:\D\DWG\100\SMAF\IPEXF1\50-A