REVISIONS		
ISS	ZONE	DESCRIPTION\PER REQUEST\DATE

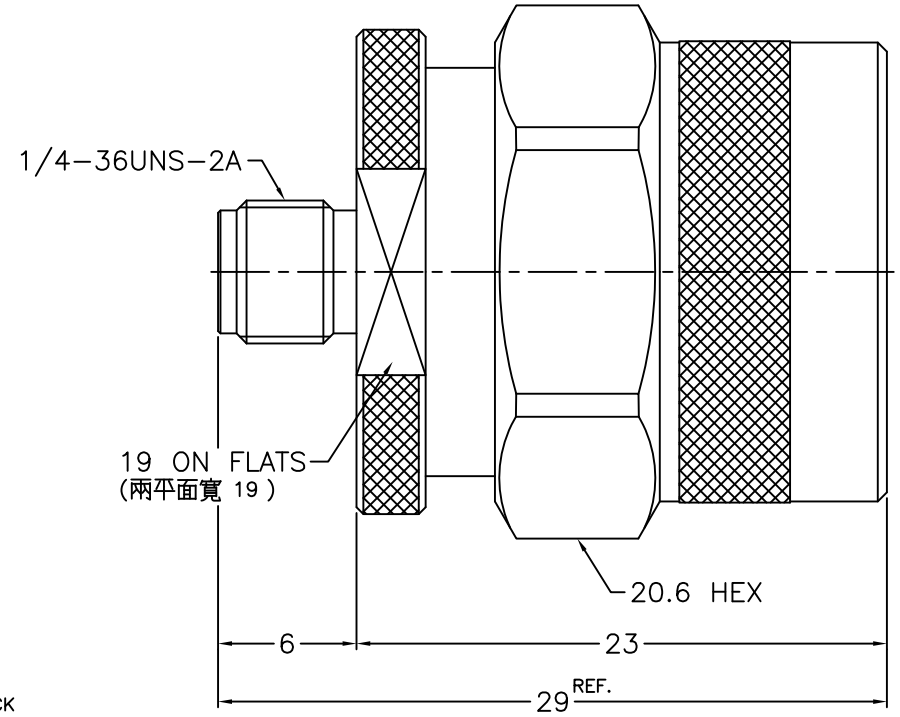

NOTES: FINISH (PLATING THICKNESS IN MICRO-INCHES)
1. BRASS
2. NICKEL PL. 100 MIN. THICK OVER COPPER PL. 50 MIN. THICK
3. BERYLLIUM COPPER
4. GOLD PL. 3 MIN. THICK OVER NICKEL PL. 50 MIN. THICK OVER COPPER PL. 50 MIN. THICK
5. TEFLON

RoHS COMPLIANT

NO.	DESCRIPTION	MATERIAL	FINISH	Q'TY	DRAWING NO.
8	INSULATOR	NOTE 5	NATURAL	1	100-NM1-SMAF-8-50T
7	SHELL	NOTE 1	NOTE 2	1	5824-1111G1-7
6	GASKET	SILICONE	RED	1	GS-80-156-15
5	RETAINER RING	SUS 304	NATURAL	1	5824-1000-7
4	CONTACT BODY	NOTE 1	NOTE 2	1	100-NM1-SMAF-4
3	CONTACT PIN	NOTE 3	NOTE 4	1	100-NM1-SMAF-3
2	INSULATOR	NOTE 5	NATURAL	1	100-NM1-SMAF-2-50T
1	BODY	NOTE 1	NOTE 2	1	100-NM1-SMAF-1

DIMENSIONS ARE IN MILLIMETERS

UNLESS OTHERWISE SPECIFIED TOLERANCES
0.5-6 = ±0.2
6-30 = ±0.4
30-120 = ±0.6
120-315 = ±1
315-1000 = ±1.6
1000-2000 = ±2.4

SCALE 3/1 | ISSUE 1

PART NO.

APPROVED | DATE 07-14-'16

CHECKED | DATE 07-14-'16

DRAWN GOLDEN | DATE 07-14-'16

G.L.I.

TITLE
SMA JACK TO N PLUG ADAPTOR

DRAWING NO.
100-NM1-SMAF-50

FILE NO. R:\D\G\DWG\100\NM1-SMAF\50