REVISIONS		
ISS	ZONE	DESCRIPTION\PER REQUEST\DATE

FREQUENCY RANGE		DC–18.0GHz
IMPEDANCE (CODE)		75ohm
VSWR	DC–<3GHz	<1.15
	3–<6GHz	<1.20
	6–18GHz	<1.25

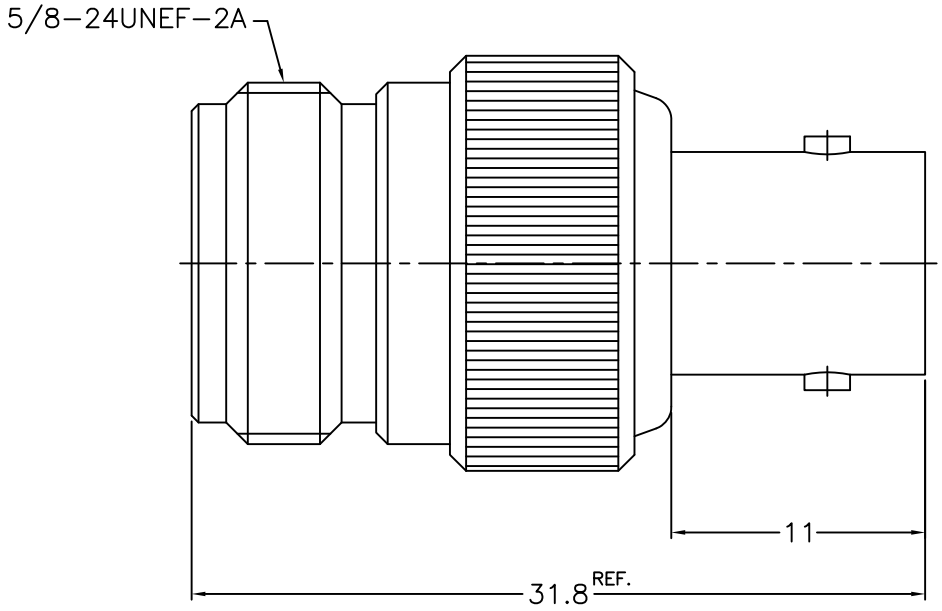

NOTES: FINISH (PLATING THICKNESS IN MICRO–INCHES)
1. BRASS
2. NICKEL PL. 100 MIN. THICK OVER COPPER PL. 50 MIN. THICK
3. BERYLLIUM COPPER
4. GOLD PL. 3 MIN. THICK OVER NICKEL PL. 50 MIN. THICK OVER COPPER PL. 50 MIN. THICK
5. ULTEM 1000

RoHS COMPLIANT

NO.	DESCRIPTION	MATERIAL	FINISH	Q'TY	DRAWING NO.
5	INSULATOR	NOTE 5	NATURAL	1	100–NM2–BM–3–75T
4	CONTACT PIN	NOTE 3	NOTE 4	1	100–NM3–BF–4
3	CONTACT PIN	NOTE 3	NOTE 4	1	100–NF4–BM–3
2	BODY	NOTE 1	NOTE 2	1	100–NM3–BF–2
1	BODY	NOTE 1	NOTE 2	1	100–NF4–BF–1

DIMENSIONS ARE IN MILLIMETERS
UNLESS OTHERWISE SPECIFIED TOLERANCES
0.5–6 = ±0.2
6–30 = ±0.4
30–120 = ±0.6
120–315 = ±1
315–1000 = ±1.6
1000–2000 = ±2.4

SCALE 3/1 | ISSUE 1

PART NO.

APPROVED | DATE 06–11–'18

CHECKED | DATE 06–11–'18

DRAWN BRIAN | DATE 06–11–'18

G.L.I.

TITLE
N JACK TO BNC JACK ADAPTOR

DRAWING NO.
100–NF4–BF–75

FILE NO. R:\D\G\DWG\100\NF4–BF\75