REVISIONS		
ISS	ZONE	DESCRIPTION\PER REQUEST\DATE

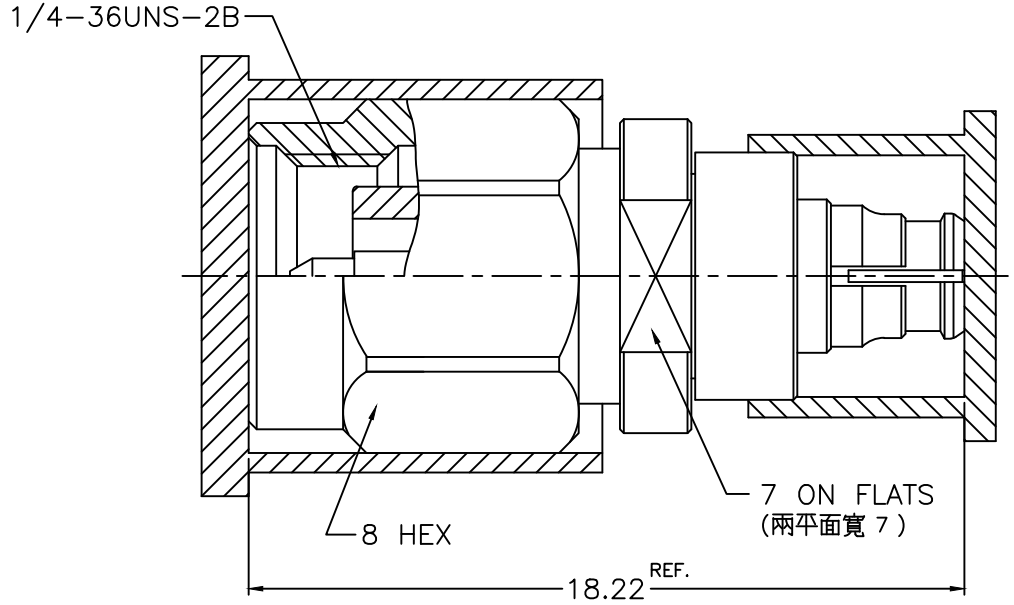

NOTES: FINISH (PLATING THICKNESS IN MICRO-INCHES)
1. BERYLLIUM COPPER
2. STAINLESS STEEL
3. PASSIVATED
4. GOLD PL. 10 MIN. THICK OVER ELECTROLESS NICKEL PL. 100 MIN. THICK
5. ULTEM 1000
6. NICKEL PL. 100 MIN. THICK OVER COPPER PL. 50 MIN. THICK
7. GOLD PL. 5 MIN. THICK OVER ELECTROLESS NICKEL PL. 100 MIN. THICK

NO.	DESCRIPTION	MATERIAL	FINISH	Q'TY	DRAWING NO.
11	CAP	LDPE	NATURAL		
10	CAP	LDPE	NATURAL		
9	SHELL	NOTE 2	NOTE 3		
8	RETAINER RING	NOTE 1	NOTE 6		
7	RETAINER RING	NOTE 1	NOTE 7		
6	INSULATOR	NOTE 5	NATURAL		
5	CONTACT BODY	NOTE 1	NOTE 7		
4	BODY	NOTE 2	NOTE 7		
3	BODY	NOTE 2	NOTE 7		
2	INSULATOR	NOTE 5	NATURAL		
1	CONTACT PIN	NOTE 1	NOTE 4		

RoHS COMPLIANT

備注：”＊”重要尺寸

DIMENSIONS ARE IN MILLIMETERS

UNLESS OTHERWISE SPECIFIED TOLERANCES
0.5–6 = ±0.2
6–30 = ±0.4
30–120 = ±0.6
120–315 = ±1
315–1000 = ±1.6
1000–2000 = ±2.4

SCALE	5/1	ISSUE	A

PART NO.

APPROVED	DATE	09–07–'22
CHECKED	DATE	09–07–'22
DRAWN	DATE	09–07–'22

G.L.I.

TITLE 2.92mm PLUG TO SMP PLUG(F) ADAPTOR

DRAWING NO. 100–292M–SMPF1–50

FILE NO. R:\D\DWG\100\292M\SMPF1\50