REVISIONS		
ISS	ZONE	DESCRIPTION\PER REQUEST\DATE

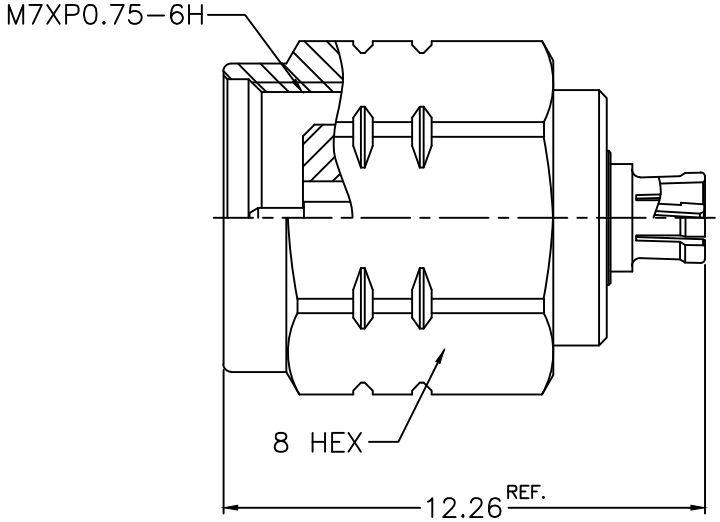

NOTES: FINISH (PLATING THICKNESS IN MICRO–INCHES)
1. BERYLLIUM COPPER
2. STAINLESS STEEL
3. PASSIVATED
4. NICKEL PL. 100 MIN. THICK OVER COPPER PL. 50 MIN. THICK
5. GOLD PL. 10 MIN. THICK OVER ELECTROLESS NICKEL PL. 100 MIN. THICK
6. ULTEM 1000

RoHS COMPLIANT

NO.	DESCRIPTION	MATERIAL	FINISH	Q'TY	DRAWING NO.
6	SHELL	NOTE 2	NOTE 3		
5	RETAINER RING	NOTE 1	NOTE 4		
4	BODY	NOTE 2	NOTE 3		
3	BODY	NOTE 1	NOTE 5		
2	INSULATOR	NOTE 6	NATURAL		
1	CONTACT PIN	NOTE 1	NOTE 5		

DIMENSIONS ARE IN MILLIMETERS

UNLESS OTHERWISE SPECIFIED TOLERANCES
0.5–6 = ±0.2
6–30 = ±0.4
30–120 = ±0.6
120–315 = ±1
315–1000 = ±1.6
1000–2000 = ±2.4

SCALE 5/1 | ISSUE 1

PART NO.

APPROVED | DATE 02–06–'23

CHECKED | DATE 02–06–'23

DRAWN ALAN | DATE 02–06–'23

G.L.I.

TITLE
1.85mm PLUG TO MINI–SMP PLUG(F) ADAPTOR

DRAWING NO.
100–185M–SMPMF3–50

FILE NO. R:\D\DWG\100\185M\SMPMF3\50